Cisal
TEL. (+39) 0322 918111
MAIL. cisal@cisal.it

Single lever sink mixer with pull out handspray KITCHEN_LL004570

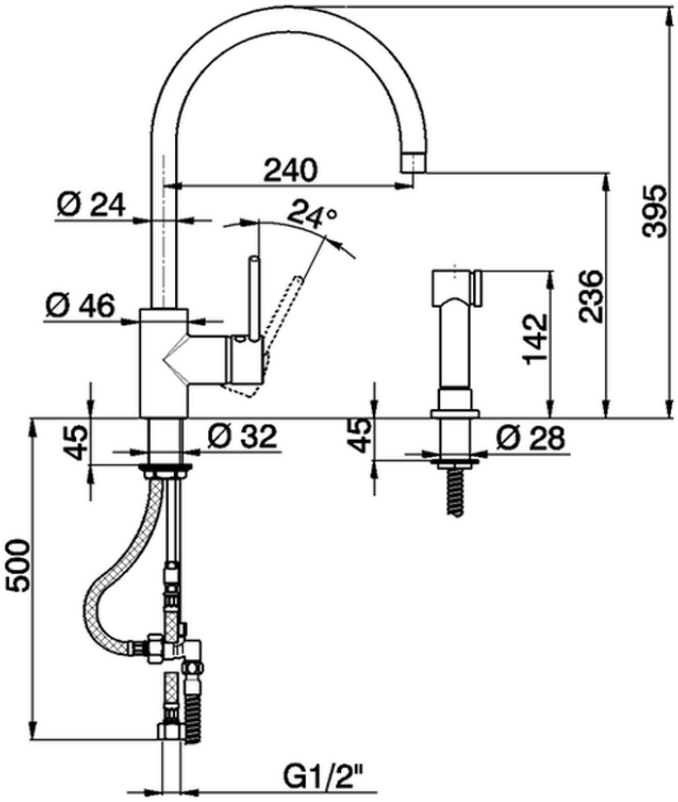

LL004570

https://en.cisal.it/single-lever-sink-mixer-with-pull-out-handspray-kitchen-ll004570

2026-04-08

© 2021 Cisal. Via Pietro Durio 160 - 28010 - Alzo (NO) - Italia
Mail: cisal@cisal.it, Telefono: (+39) 0322 918111, P.Iva IT02422810032.