Cisal
TEL. (+39) 0322 918111
MAIL. cisal@cisal.it

Shower arm with showerhead WELLNESS_DS013660

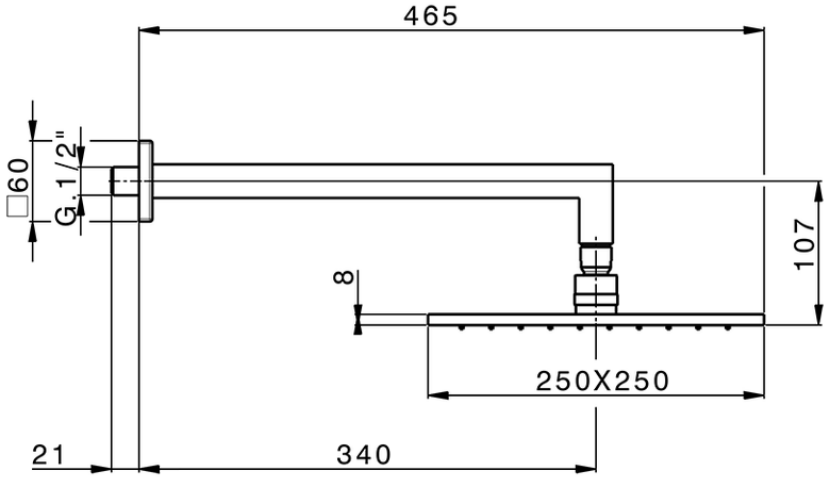

DS013660

https://en.cisal.it/shower-arm-with-showerhead-wellness-ds013660

2026-06-14

© 2021 Cisal. Via Pietro Durio 160 - 28010 - Alzo (NO) - Italia
Mail: cisal@cisal.it, Telefono: (+39) 0322 918111, P.Iva IT02422810032.