Cisal
TEL. (+39) 0322 918111
MAIL. cisal@cisal.it

Deck-mounted 4-hole bath mixer ARCANA TOSCANA_TS000264

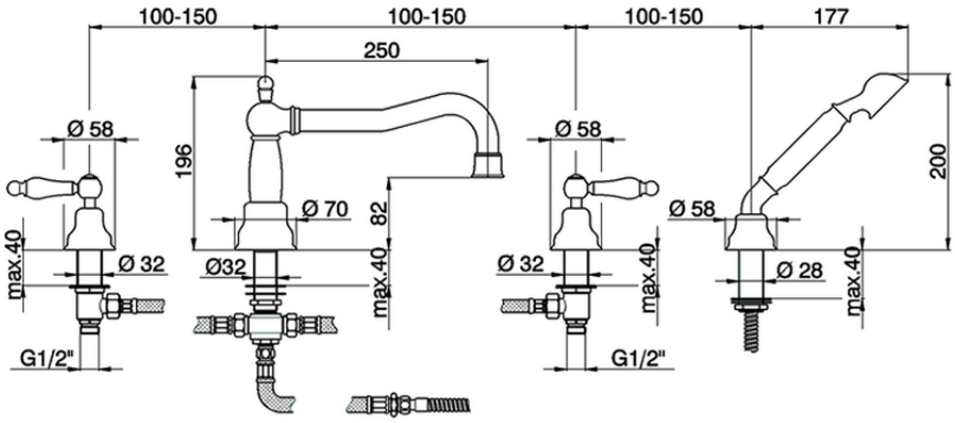

TS000264

https://en.cisal.it/deck-mounted-4-hole-bath-mixer-arcana-toscana-ts000264

2026-06-14

© 2021 Cisal. Via Pietro Durio 160 - 28010 - Alzo (NO) - Italia
Mail: cisal@cisal.it, Telefono: (+39) 0322 918111, P.Iva IT02422810032.