Cisal
TEL. (+39) 0322 918111
MAIL. cisal@cisal.it

2-functions Thermostatic shower set TENDER_C2C8402A

MODEL **C2C8402A**

2-functions Thermostatic shower set,2 outlet deviastop,adjustable riser column,sliding handshower holder,100 mm ABS 3 sprays handshower,250 mm round showerhead 13 mm thick ABS,150 cm smooth SILVERFLEX Flexible Hose

AVAILABLE FINISHINGS

21 21 Chrome

CHARACTERISTICS

Cartridge Spare Parts **22.04A.AR - ZZ97279004**

Argo 2 (long filter) Thermostatic Valve

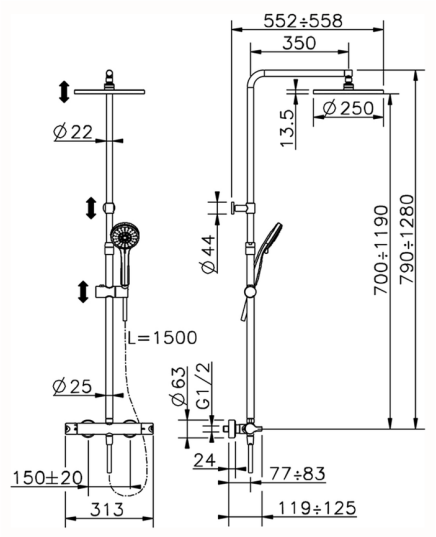

DeviaStop

The Cisal Devia Stop technology allows to adjust the water flow and to direct it to the selected output point (overhead soaker, hand shower, etc).

SafeTouch

The Cisal SafeTouch system maintains the mixer body cool to the touch during operation.

Thermostatic

The Cisal thermostatic is your personal water manager, helping you to handle, control and save water and energy.

2024-12-22

© 2021 Cisal. Via Pietro Durio 160 - 28010 - Alzo (NO) - Italia
Mail: cisal@cisal.it, Telefono: (+39) 0322 918111, P.Iva IT02422810032.