Cisal
TEL. (+39) 0322 918111
MAIL. cisal@cisal.it

Single lever bidet mixer PURA SINCRONIA_I1000564



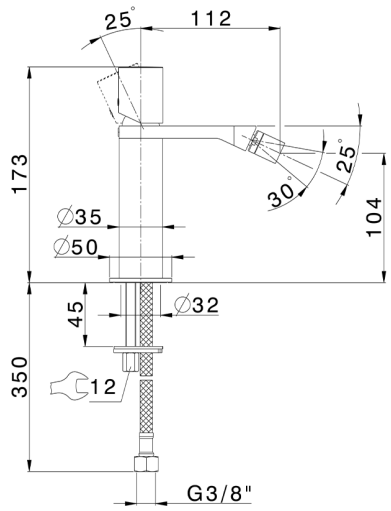

MODEL **I1000564**

Single lever bidet mixer PURA,without pop up waste,G.3/8" Stainless Steel Flexible

AVAILABLE FINISHINGS

	21	21 Chrome
	2F	2F Brushed Nickel
	2W	2W Brushed Gold
	2X	2X Black Titanium
	3W	3W Brushed Black Titanium
	40	40 Matt Black
	48	48 Tobacco
	5G	5G Rose Gold

CHARACTERISTICS

Cartridge Spare Parts **ZZ96550000**

25 mm Cartridge

2026-11-23

© 2021 Cisal. Via Pietro Durio 160 - 28010 - Alzo (NO) - Italia
Mail: cisal@cisal.it, Telefono: (+39) 0322 918111, P.Iva IT02422810032.