Single lever bidet mixer PURA SINCRONIA_I1000564

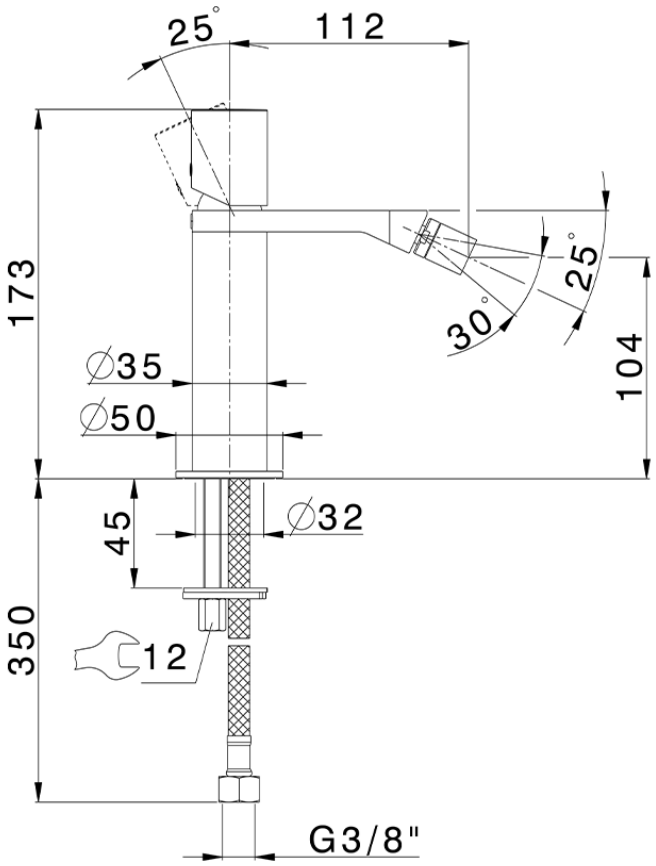

I1000564

https://en.cisal.it/single-lever-bidet-mixer-pura-sincronia-i1000564

2026-11-23

© 2021 Cisal. Via Pietro Durio 160 - 28010 - Alzo (NO) - Italia
Mail: cisal@cisal.it, Telefono: (+39) 0322 918111, P.Iva IT02422810032.