Cisal
TEL. (+39) 0322 918111
MAIL. cisal@cisal.it

Sink mixer KITCHEN_RE000530

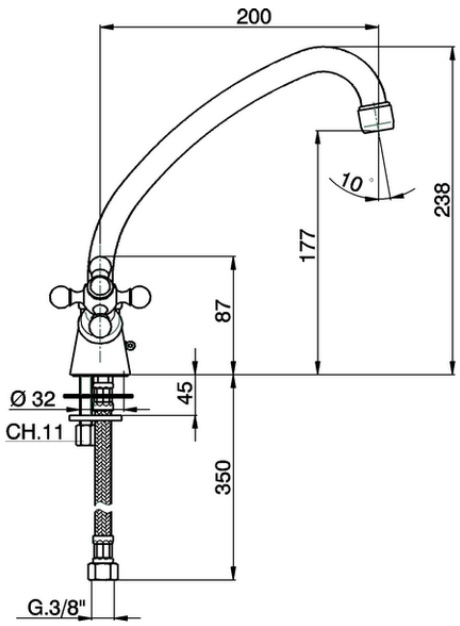

RE000530

https://en.cisal.it/sink-mixer-kitchen-re000530

2026-11-23

© 2021 Cisal. Via Pietro Durio 160 - 28010 - Alzo (NO) - Italia
Mail: cisal@cisal.it, Telefono: (+39) 0322 918111, P.Iva IT02422810032.