Cisal
TEL. (+39) 0322 918111
MAIL. cisal@cisal.it

2-functions Single lever shower set ARCANA ROYAL_AY004050

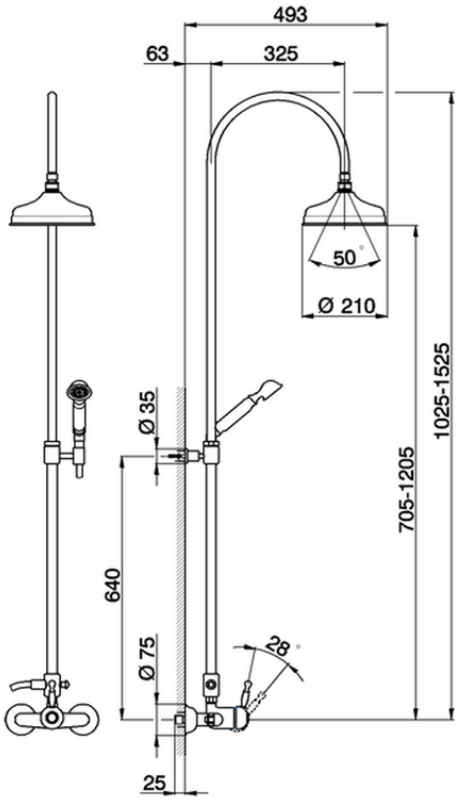

AY004050

https://en.cisal.it/2-functions-single-lever-shower-set-arcana-royal-ay004050

2026-06-14

© 2021 Cisal. Via Pietro Durio 160 - 28010 - Alzo (NO) - Italia
Mail: cisal@cisal.it, Telefono: (+39) 0322 918111, P.Iva IT02422810032.