Cisal
TEL. (+39) 0322 918111
MAIL. cisal@cisal.it

Bidet 3-holes mixer TR_TR001211

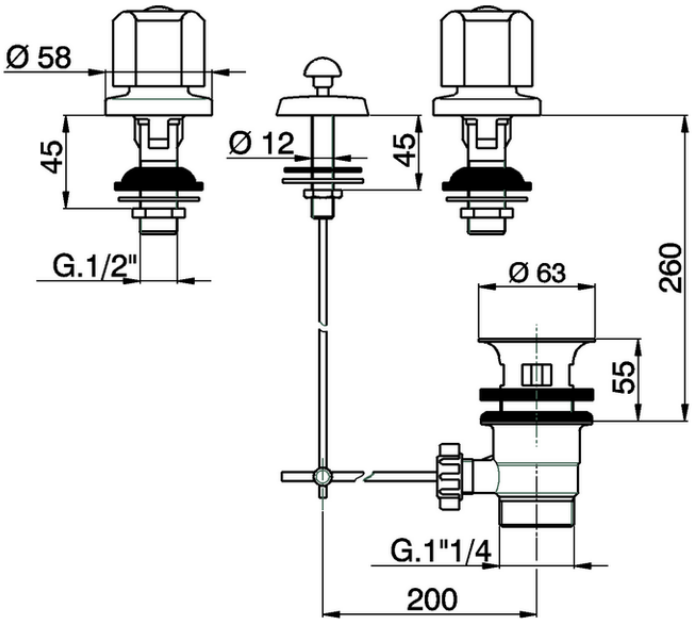

TR001211

https://en.cisal.it/bidet-3-holes-mixer-tr-tr001211

2025-12-17

© 2021 Cisal. Via Pietro Durio 160 - 28010 - Alzo (NO) - Italia
Mail: cisal@cisal.it, Telefono: (+39) 0322 918111, P.Iva IT02422810032.