Cisal
TEL. (+39) 0322 918111
MAIL. cisal@cisal.it

Washbasin mixer BARCELONA_BA000510

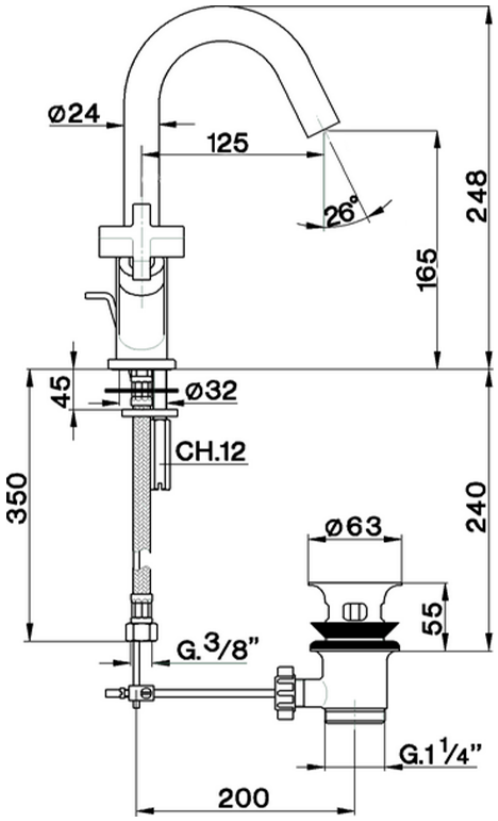

BA000510

https://en.cisal.it/washbasin-mixer-barcelona-ba000510

2026-01-12

© 2021 Cisal. Via Pietro Durio 160 - 28010 - Alzo (NO) - Italia
Mail: cisal@cisal.it, Telefono: (+39) 0322 918111, P.Iva IT02422810032.