Cisal
TEL. (+39) 0322 918111
MAIL. cisal@cisal.it

Exposed part for Thermostatic One Box Valve LINEAVIVA_LV0BT030

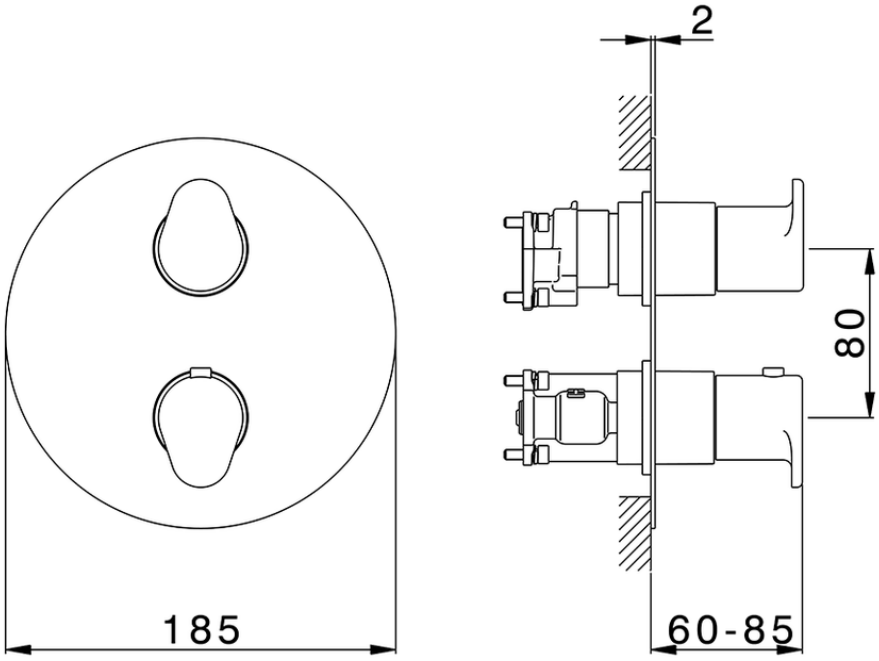

LV0BT030

https://en.cisal.it/exposed-part-for-thermostatic-one-box-valve-lineaviva-lv0bt030

© 2021 Cisal. Via Pietro Durio 160 - 28010 - Alzo (NO) - Italia
Mail: cisal@cisal.it, Telefono: (+39) 0322 918111, P.Iva IT02422810032.

Cisal
TEL. (+39) 0322 918111
MAIL. cisal@cisal.it

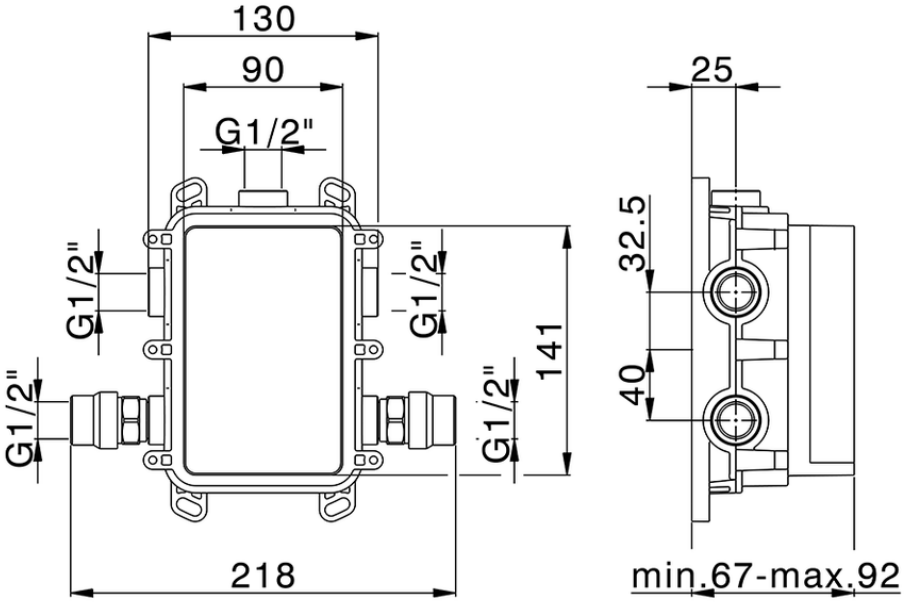

ZA00B031

https://en.cisal.it/one-box-universal-concealed-part-one-box-za00b031

© 2021 Cisal. Via Pietro Durio 160 - 28010 - Alzo (NO) - Italia
Mail: cisal@cisal.it, Telefono: (+39) 0322 918111, P.Iva IT02422810032.

Cisal
TEL. (+39) 0322 918111
MAIL. cisal@cisal.it

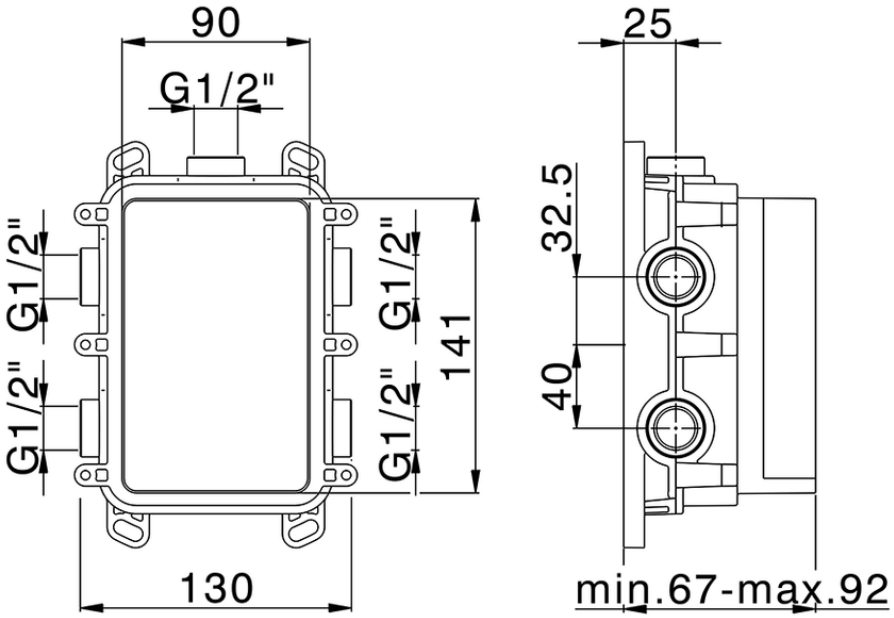

ZA00B030

https://en.cisal.it/one-box-universal-concealed-part-one-box-za00b030

2026-03-15

© 2021 Cisal. Via Pietro Durio 160 - 28010 - Alzo (NO) - Italia
Mail: cisal@cisal.it, Telefono: (+39) 0322 918111, P.Iva IT02422810032.