Cisal
TEL. (+39) 0322 918111
MAIL. cisal@cisal.it

Single lever bidet mixer EnergySave TENDER_C2002565

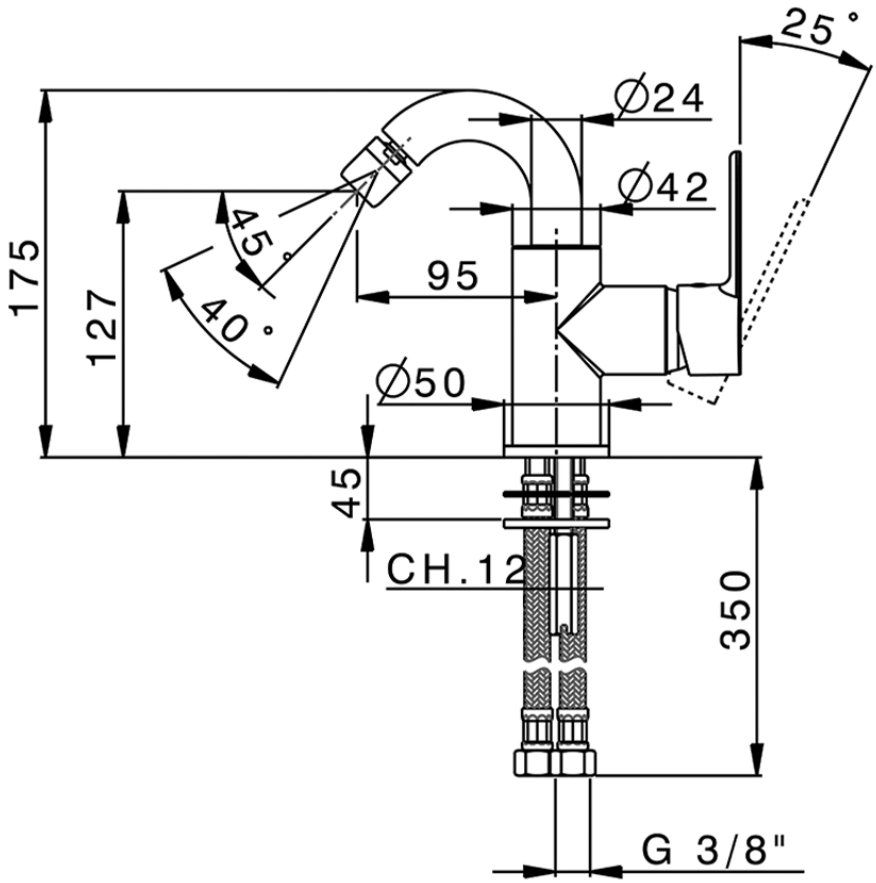

C2002565

https://en.cisal.it/single-lever-bidet-mixer-energysave-tender-c2002565

2026-04-08

© 2021 Cisal. Via Pietro Durio 160 - 28010 - Alzo (NO) - Italia
Mail: cisal@cisal.it, Telefono: (+39) 0322 918111, P.Iva IT02422810032.