Cisal
TEL. (+39) 0322 918111
MAIL. cisal@cisal.it

# Single lever bidet mixer LESS MINIMAL_MI000554

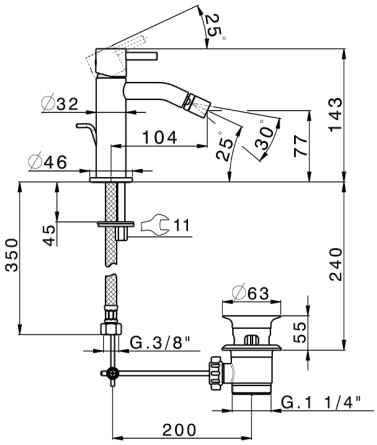


MODEL **MI000554**

Single lever bidet mixer,with 1"1/4 automatic pop up waste,G.3/8" stainless steel flexible hoses

## AVAILABLE FINISHINGS

**21** 21 Chrome

**2F** 2F Brushed Nickel

**40** 40 Matt Black

**4Q** 4Q Matt White

## CHARACTERISTICS

Cartridge Spare Parts **ZZ96550000**

**25 mm Cartridge**

© 2021 Cisal. Via Pietro Durio 160 - 28010 - Alzo (NO) - Italia
Mail: cisal@cisal.it, Telefono: (+39) 0322 918111, P.Iva IT02422810032.

**Cisal**
TEL. (+39) 0322 918111
MAIL. cisal@cisal.it

# Single lever bidet mixer LESS MINIMAL_MI000554

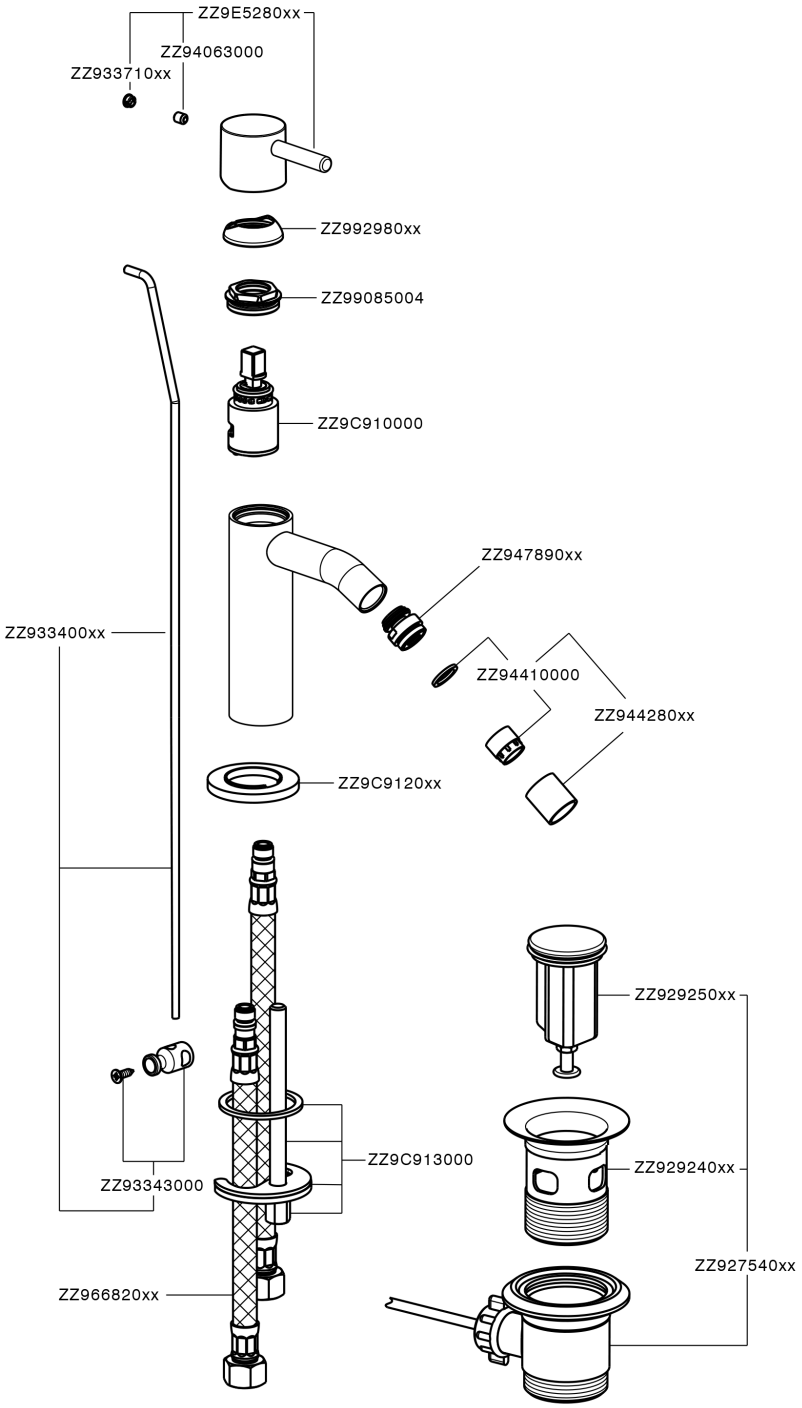


MI000554

https://en.cisal.it/single-lever-bidet-mixer-less-minimal-mi000554

2026-01-12

© 2021 Cisal. Via Pietro Durio 160 - 28010 - Alzo (NO) - Italia
Mail: cisal@cisal.it, Telefono: (+39) 0322 918111, P.Iva IT02422810032.