Cisal
TEL. (+39) 0322 918111
MAIL. cisal@cisal.it

Bath-shower mixer, 3-functions ARCANA CERAMIC_AC004151

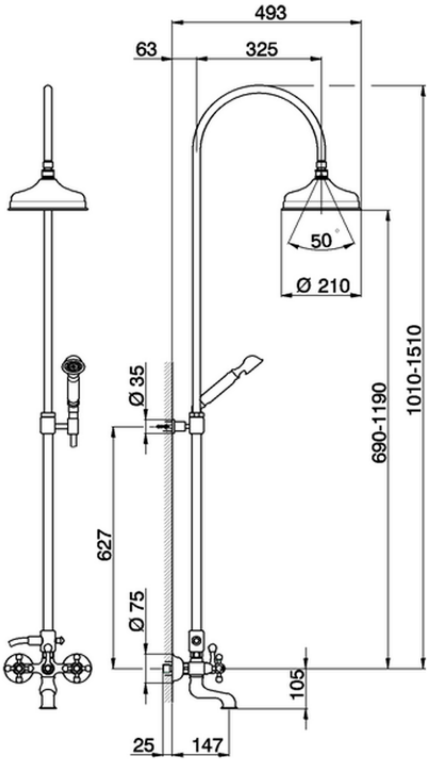

AC004151

https://en.cisal.it/bath-shower-mixer-3-functions-arcana-ceramic-ac004151

2026-06-14

© 2021 Cisal. Via Pietro Durio 160 - 28010 - Alzo (NO) - Italia
Mail: cisal@cisal.it, Telefono: (+39) 0322 918111, P.Iva IT02422810032.