Cisal
TEL. (+39) 0322 918111
MAIL. cisal@cisal.it

Cover Part for 2 Function Concealed Thermo Valve WELLNESS_RI01V200

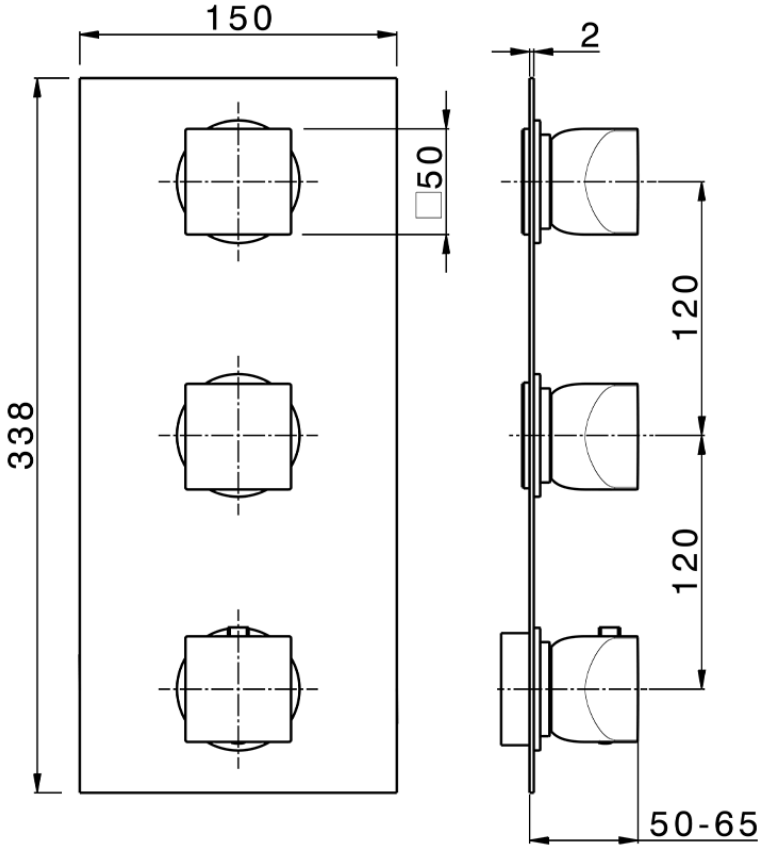

RI01V200

https://en.cisal.it/cover-part-for-2-function-concealed-thermo-valve-wellness-ri01v200

© 2021 Cisal. Via Pietro Durio 160 - 28010 - Alzo (NO) - Italia
Mail: cisal@cisal.it, Telefono: (+39) 0322 918111, P.Iva IT02422810032.

Cisal
TEL. (+39) 0322 918111
MAIL. cisal@cisal.it

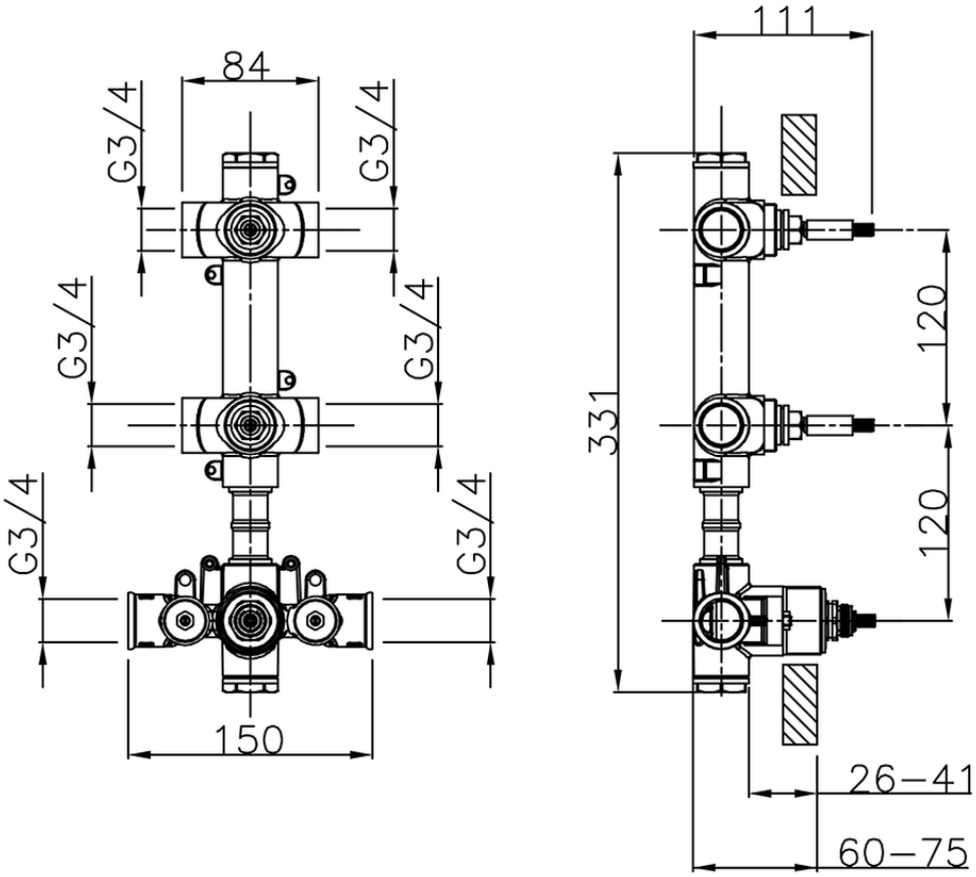

ZA01V200 https://en.cisal.it/2-function-concealed-thermostatic-valve-concealed-za01v200

2026-09-14

© 2021 Cisal. Via Pietro Durio 160 - 28010 - Alzo (NO) - Italia
Mail: cisal@cisal.it, Telefono: (+39) 0322 918111, P.Iva IT02422810032.