Cisal
TEL. (+39) 0322 918111
MAIL. cisal@cisal.it

Single lever washbasin mixer CLINIC_CL000512

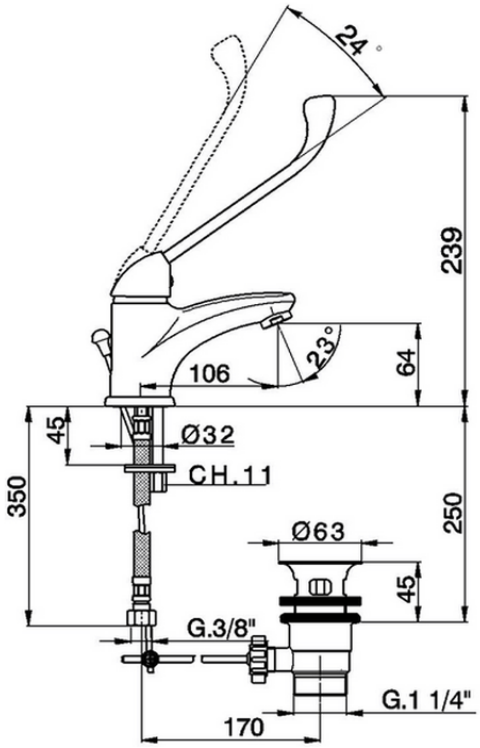

CL000512

https://en.cisal.it/single-lever-washbasin-mixer-clinic-cl000512

2026-02-23

© 2021 Cisal. Via Pietro Durio 160 - 28010 - Alzo (NO) - Italia
Mail: cisal@cisal.it, Telefono: (+39) 0322 918111, P.Iva IT02422810032.