Cisal
TEL. (+39) 0322 918111
MAIL. cisal@cisal.it

Expo. part for concealed S.L. shower valve PURA ENCANTO_N10G7200

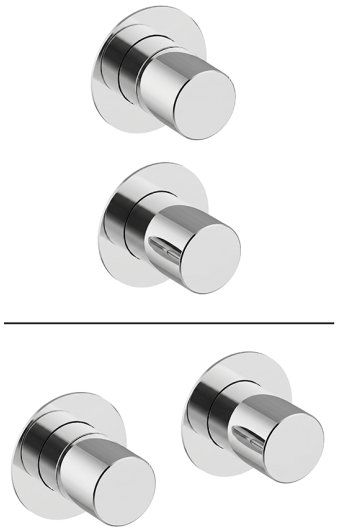

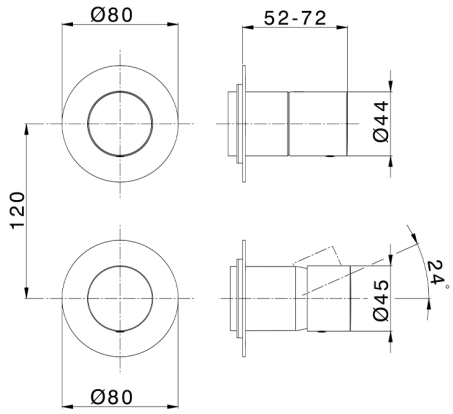

MODEL **N10G7200**

Expo.part for concealed S.L.shower valve PURA,2-Way rotating diverter,without concealed part,for item ZA0G72V0 - Vertical installation,for item ZA0G72L0 - Horizontal installation

AVAILABLE FINISHINGS

	21	21 Chrome
	2F	2F Brushed Nickel
	2W	2W Brushed Gold
	2X	2X Black Titanium
	3W	3W Brushed Black Titanium
	40	40 Matt Black
	48	48 Tobacco
	5G	5G Rose Gold

CHARACTERISTICS

Installation	**Concealed**
Required concealed parts	**ZA0G72L0**
	ZA0G72V0

2026-11-25

© 2021 Cisal. Via Pietro Durio 160 - 28010 - Alzo (NO) - Italia
Mail: cisal@cisal.it, Telefono: (+39) 0322 918111, P.Iva IT02422810032.