**Cisal**
TEL. (+39) 0322 918111
MAIL. cisal@cisal.it

# Expo. part for concealed S.L. shower valve PURA ENCANTO_N10G7200

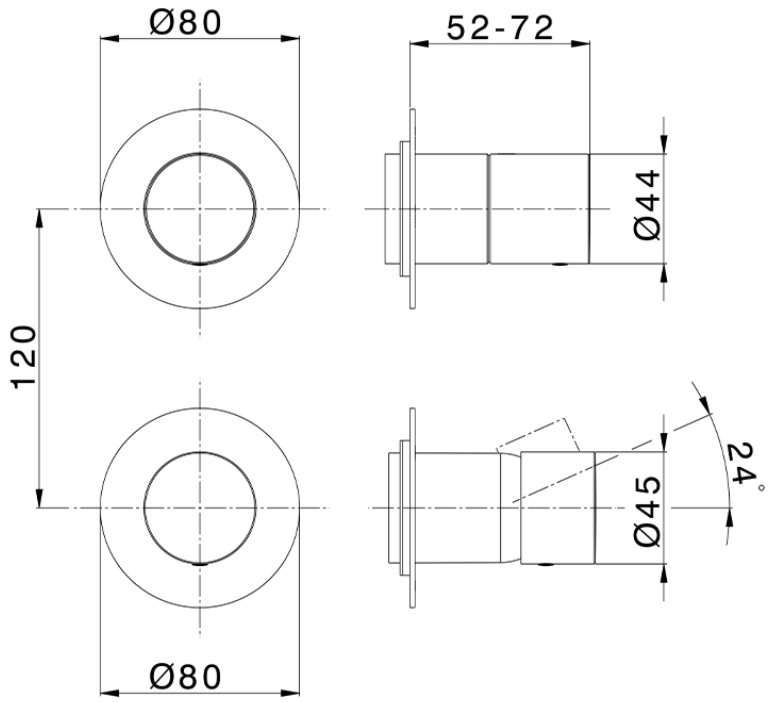


N10G7200 https://en.cisal.it/expo-part-for-concealed-s-l-shower-valve-pura-encanto-n10g7200

2026-11-24

© 2021 Cisal. Via Pietro Durio 160 - 28010 - Alzo (NO) - Italia
Mail: cisal@cisal.it, Telefono: (+39) 0322 918111, P.Iva IT02422810032.