Cisal
TEL. (+39) 0322 918111
MAIL. cisal@cisal.it

Pillar tap TR_TR000740

MODEL **TR000740**

Pillar tap,without automatic pop-up waste,without handle

AVAILABLE FINISHINGS

21 21 Chrome

CHARACTERISTICS

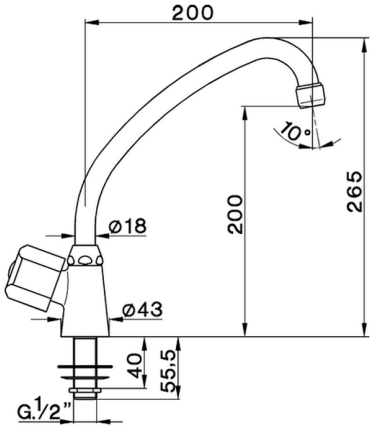

© 2021 Cisal. Via Pietro Durio 160 - 28010 - Alzo (NO) - Italia
Mail: cisal@cisal.it, Telefono: (+39) 0322 918111, P.Iva IT02422810032.

cisal

TR 00074 (TR 00075)

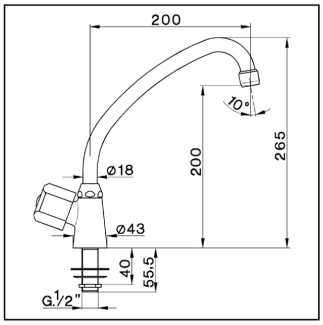

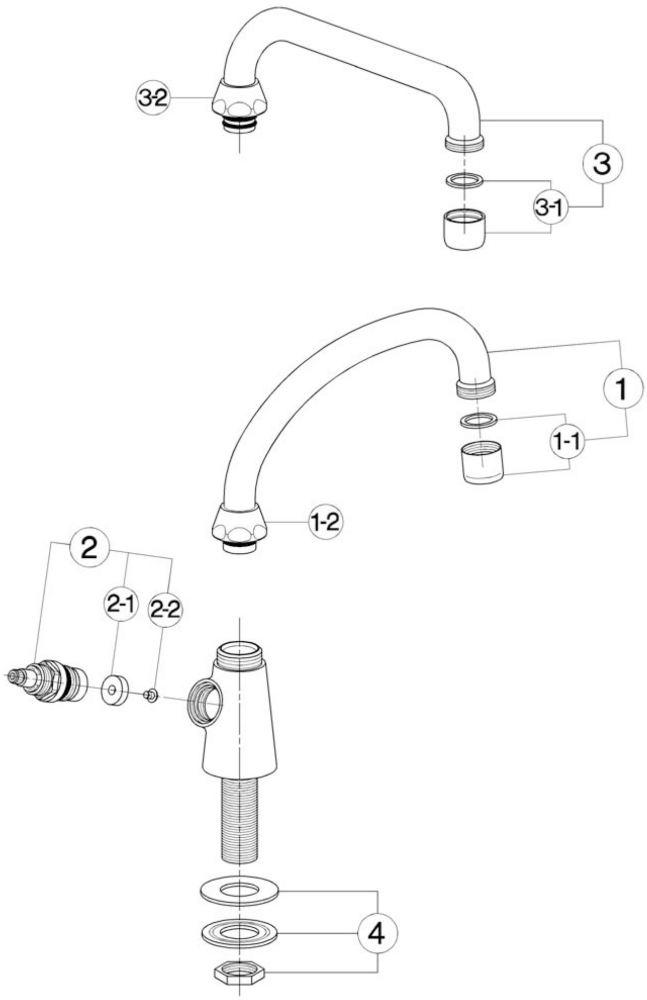

- **Rubinetto a colonna**
- ***Deck-mounted single tap***
- **Standschwenkventil**
- ***Robinet de comptoir***

bar	PORTATA BOCCA DI EROGAZIONE * *SPOUT FLOW RATE* DURCHFLUSS WANNENEINLAUF *DÉBIT BEC DÉVERSEUR* l/min.
0.1	10
0.2	14.5
0.3	18.5
0.4	21.5
0.5	24.5
1	34.5

* con rompigetto
with antisplash
mit Strahlregler
avec brise-jet

NR.	DESCRIZIONE *DESCRIPTION* BESCHREIBUNG *DÉSCRIPTION*	N. CODICE *CODE NO.* WERKSNR. *NR. CODE*
1	Canna alta Ø18 interasse 200 *Swinging spout 200 Ø18* Auslauf-Rohr-U-200 Ø18 *Bec orientable 200 Ø18*	ZZ 92739 0
1-1	Rompigetto M.22x1 *Antisplash M.22x1* Strahlregler M.22x1 *Brise-jet M.22x1*	ZZ 92771 0
1-2	Calotta 3/4" es.29 Ø19,5 *Nut 3/4" Ø19,5* Mutter 3/4" Ø19,5 *Ecrou 3/4" Ø19,5*	ZZ 92615 0
2	Vitone 1/2" "TR" *Headvalve 1/2" "TR"* Oberteil 1/2" "TR" *Tête 1/2" "TR"*	ZZ 92869 0
2-1	Guarnizione NBR 90 SH. 16,9x5,5x5 *Gasket NBR 90 SH. 16,9x5,5x5* Dichtung NBR 90 SH. 16,9x5,5x5 *Joint NBR 90 SH. 16,9x5,5x5*	ZZ 92699 0
2-2	Vite M.4x4,5 tb. Ø8 t.cr. *Screw M.4x4,5* Schraube M.4x4,5 *Vis M.4x4,5*	ZZ 92625 0

NR.	DESCRIZIONE *DESCRIPTION* BESCHREIBUNG *DÉSCRIPTION*	N. CODICE *CODE NO.* WERKSNR. *NR. CODE*
3	Canna a U Ø18 interasse 185 *Swinging spout 185 Ø18* Auslauf-Rohr-U-185 Ø18 *Bec orientable 185 Ø18*	ZZ 92736 0
3-1	Rompigetto M.22x1 *Antisplash M.22x1* Strahlregler M.22x1 *Brise-jet M.22x1*	ZZ 92771 0
3-2	Calotta 3/4" es.29 Ø19,5 *Nut 3/4" Ø19,5* Mutter 3/4" Ø19,5 *Ecrou 3/4" Ø19,5*	ZZ 92615 0
4	Set installazione rubinetto a colonna *Installation set deck-mounted tap* Befestigungsset *Set installation*	ZZ 92740 0

NR.	DESCRIZIONE *DESCRIPTION* BESCHREIBUNG *DÉSCRIPTION*	N. CODICE *CODE NO.* WERKSNR. *NR. CODE*

© 2021 Cisal. Via Pietro Durio 160 - 28010 - Alzo (NO) - Italia
Mail: cisal@cisal.it, Telefono: (+39) 0322 918111, P.Iva IT02422810032.