Cisal
TEL. (+39) 0322 918111
MAIL. cisal@cisal.it

3 hole bidet mixer ARCANA AMERICA_AA001210



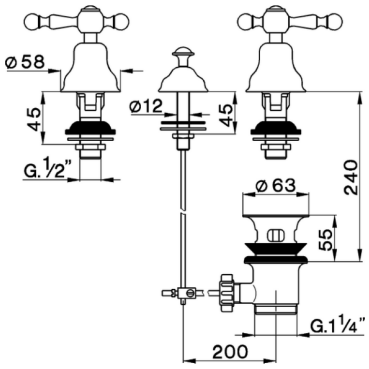

MODEL **AA001210**

3 hole bidet mixer,with automatic 1"1/4 automatic pop-up waste,without spout

AVAILABLE FINISHINGS

21 21 Chrome

24 24 Gold

26 26 Old Copper

27 27 Old Bronze

2A 2A Satin Brushed Nickel

74 74 Chrome/Gold

CHARACTERISTICS

© 2021 Cisal. Via Pietro Durio 160 - 28010 - Alzo (NO) - Italia
Mail: cisal@cisal.it, Telefono: (+39) 0322 918111, P.Iva IT02422810032.

3 hole bidet mixer ARCANA AMERICA_AA001210

cisal

AA 00121

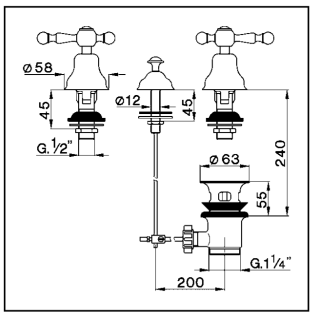

- **Combinazione bidet**
- ***Bidet mixer***
- **Bidetbatterie**
- ***Mélangeur bidet***

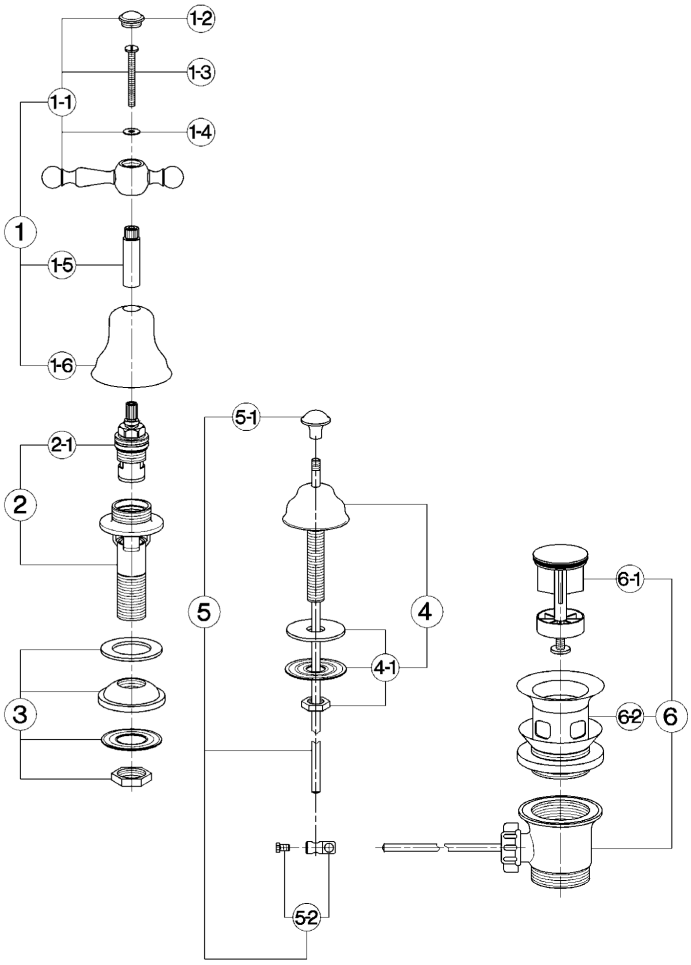

NR.	DESCRIZIONE *DESCRIPTION* BESCHREIBUNG *DÉSCRIPTION*	N. CODICE *CODE NO.* WERKSNR. *NR. CODE*
1	Leva con cappuccio "AA" *Lever with escutcheon "AA"* Hebel "AA" mit Abdeckkappe *Levier "AA" avec rosace*	ZZ 92287 0
1-1	Leva "AA" con vite e placchetta *Lever with screw and plate "AA"* Hebel "AA" mit Schraube und Abdeckkappe *Levier "AA" avec vis et plaquette*	ZZ 92382 0
1-2	Placchetta a vite maniglia "AR" *Cap for handle "AR"* Abdeckkappe "AR" Griff *Plaquette cache - vis crois. "AR"*	ZZ 92617 0
1-3	Vite M.4x40 t.c. tc. *Screw M.4x40* Schraube M.4x40 *Vis M.4x40*	ZZ 92679 0
1-4	Rondella ottone 12x4,3x1 *Ring in brass 12x4,3x1* Unterlegscheibe 12x4,3x1 *Joint laiton 12x4,3x1*	ZZ 92673 0
1-5	Prolunga asta vitone batterie "AA" *Extension for headvalve "AA" - long* Verlaengerung f/Batterie "AA" *Rallonge levier "AA"*	ZZ 92672 0

NR.	DESCRIZIONE *DESCRIPTION* BESCHREIBUNG *DÉSCRIPTION*	N. CODICE *CODE NO.* WERKSNR. *NR. CODE*
1-6	Cappuccio a campana "AR" *Escutcheon "AR"* Abdeckkappe "AR" *Rosace "AR"*	ZZ 92598 0
2	Rubinetto bidet con vitone destro "AA" *Bidet tap-right headvalve "AA"* Bidetventil "AA" mit Oberteil - rechts - *Robinet bidet "AA" - tête droite*	ZZ 92872 0
2	Rubinetto bidet con vitone sinistro "AA" *Bidet tap-left headvalve "AA"* Bidetventil "AA" mit Oberteil - links - *Robinet bidet "AA" - tête gauche*	ZZ 92873 0
3	Set installazione rubinetto bidet *Installation set bidet tap* Befestigungsset "AR" Bidet *Set installation bidet "AR"*	ZZ 92746 0
4	Centrale bidet "AR" *Rod set for bidet "AR".* Zugstange Set "AR" Bidet *Tige set - bidet "AR"*	ZZ 90137 0
4-1	Set installazione centrale combinazione bidet *Installation set bidet mixer* Befestigungsset *Set installation*	ZZ 92786 0

NR.	DESCRIZIONE *DESCRIPTION* BESCHREIBUNG *DÉSCRIPTION*	N. CODICE *CODE NO.* WERKSNR. *NR. CODE*
5	Astina scarico completa Ø6 *Rod Ø6* Zugstange Ø6 *Tige Ø6*	ZZ 92759 0
5-1	Pomolo per scarico automatico "AR" *Knob for pop-up rod "AR"* Zugknopf f/Ablaufgarn."AR" *Pommeau - tige "AR"*	ZZ 92624 0
5-2	Morsetto astina scarico automatico Ø6,2 *Connection for pop-up rod Ø6,2* Gelenkstueck f/Zugstange Ø6,2 *Jonction x tige vidage Ø6,2*	ZZ 92622 0
6	Scarico automatico 1" 1/4 sabbiato *Pop-up waste 1"1/4* Ablaufgarnitur 1" 1/4 *Vidage automat. 1"1/4*	ZZ 92754 0
6-1	Tappo completo scarico automatico 1" 1/4 *Plug for pop-up waste 1" 1/4* Stopfen f/Ablaufg. kpl 1" 1/4 *Bonde - vidage 1"1/4*	ZZ 92925 0
6-2	Piletta per scarico automatico 1" 1/4 *Waste for bath drain 1" 1/4* Ablauf f/Ablaufgarnitur 1" 1/4 *Crépine pour vidage 1" 1/4*	ZZ 92924 0

AA.12

© 2021 Cisal. Via Pietro Durio 160 - 28010 - Alzo (NO) - Italia
Mail: cisal@cisal.it, Telefono: (+39) 0322 918111, P.Iva IT02422810032.