Cisal
TEL. (+39) 0322 918111
MAIL. cisal@cisal.it

Toilet-jet handshower set HYGENIC SHOWERS_A3007910

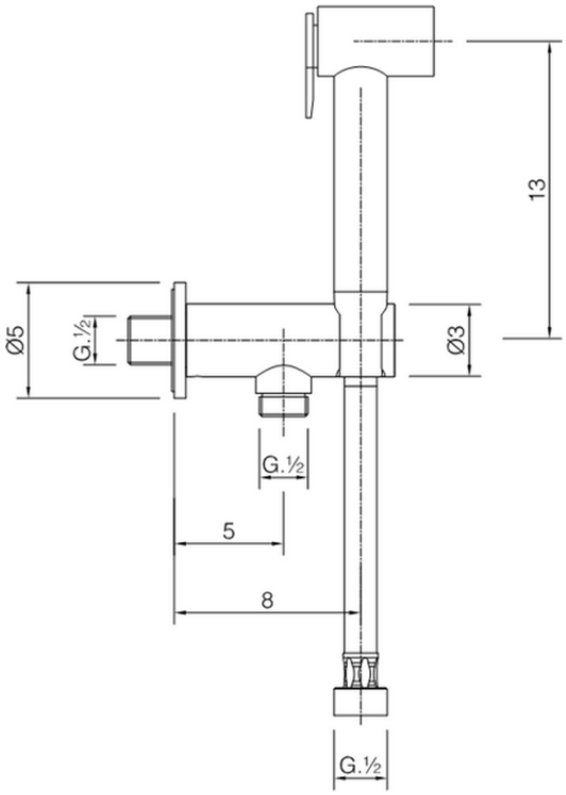

A3007910

https://en.cisal.it/toilet-jet-handshower-set-hygenic-showers-a3007910

2026-03-15

© 2021 Cisal. Via Pietro Durio 160 - 28010 - Alzo (NO) - Italia
Mail: cisal@cisal.it, Telefono: (+39) 0322 918111, P.Iva IT02422810032.