Cisal
TEL. (+39) 0322 918111
MAIL. cisal@cisal.it

Exposed part for single-lever bath shower mixer HI-RISE_RI014204

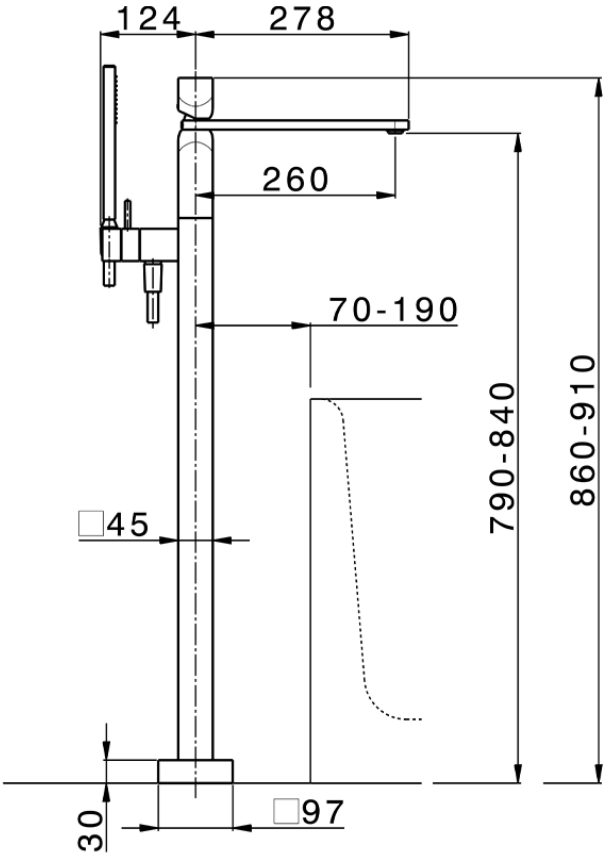

RI014204

https://en.cisal.it/exposed-part-for-single-lever-bath-shower-mixer-hi-rise-ri014204

© 2021 Cisal. Via Pietro Durio 160 - 28010 - Alzo (NO) - Italia
Mail: cisal@cisal.it, Telefono: (+39) 0322 918111, P.Iva IT02422810032.

Cisal
TEL. (+39) 0322 918111
MAIL. cisal@cisal.it

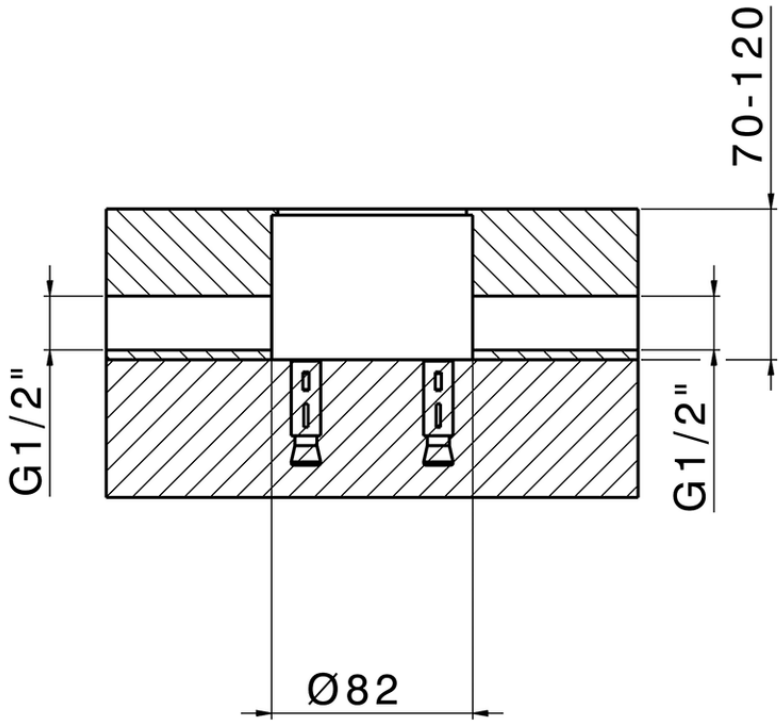

ZA004510

https://en.cisal.it/concealed-part-single-lever-free-standing-concealed-za004510

2026-09-14

© 2021 Cisal. Via Pietro Durio 160 - 28010 - Alzo (NO) - Italia
Mail: cisal@cisal.it, Telefono: (+39) 0322 918111, P.Iva IT02422810032.