Cisal
TEL. (+39) 0322 918111
MAIL. cisal@cisal.it

Single Handle Kitchen faucet Cooking100 KITCHEN_CV001005

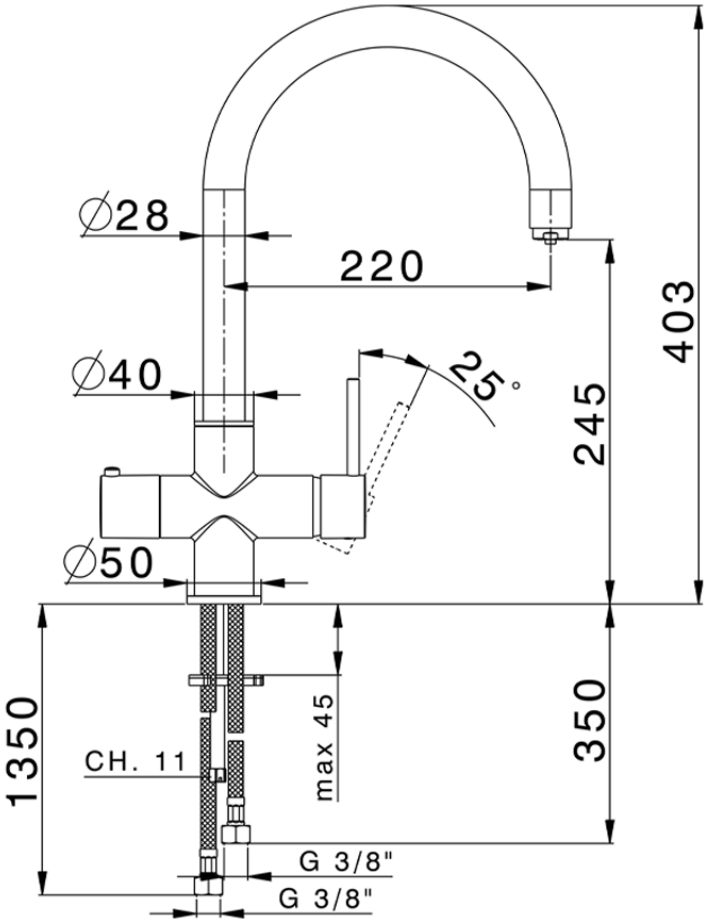

CV001005

https://en.cisal.it/single-handle-kitchen-faucet-cooking100-kitchen-cv001005

2026-06-06

© 2021 Cisal. Via Pietro Durio 160 - 28010 - Alzo (NO) - Italia
Mail: cisal@cisal.it, Telefono: (+39) 0322 918111, P.Iva IT02422810032.