Cisal
TEL. (+39) 0322 918111
MAIL. cisal@cisal.it

Expo. part for concealed S.L. shower valve PLISSÉ ENCANTO_N20G8100



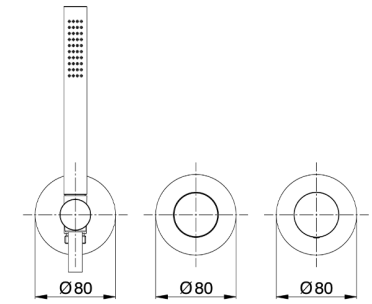

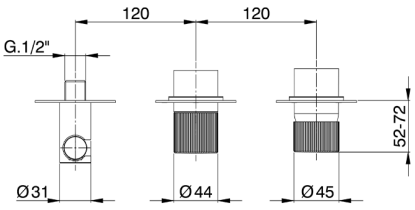

MODEL **N20G8100**

Expo.part for concealed S.L.shower valve PLISSÉ,2-Way rotating diverter,22,5 mm Brass One Spray handshower,150 cm SUPREME smooth flexible hose,without concealed part - for item ZA0G81L0

AVAILABLE FINISHINGS

	21	21 Chrome
	2F	2F Brushed Nickel
	2W	2W Brushed Gold
	2X	2X Black Titanium
	3W	3W Brushed Black Titanium
	40	40 Matt Black
	48	48 Tobacco
	5G	5G Rose Gold

CHARACTERISTICS

Installation	**Concealed**
Required concealed parts	**ZA0G81L0**

2026-11-24

© 2021 Cisal. Via Pietro Durio 160 - 28010 - Alzo (NO) - Italia
Mail: cisal@cisal.it, Telefono: (+39) 0322 918111, P.Iva IT02422810032.