Cisal
TEL. (+39) 0322 918111
MAIL. cisal@cisal.it

# Expo. part for concealed S.L. shower valve PLISSÉ ENCANTO_N20G8100



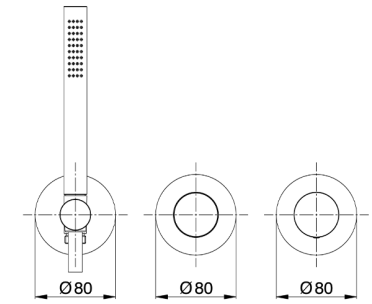


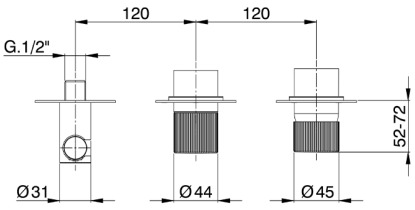


MODEL **N20G8100**

Expo.part for concealed S.L.shower valve PLISSÉ,2-Way rotating diverter,22,5 mm Brass One Spray handshower,150 cm SUPREME smooth flexible hose,without concealed part - for item ZA0G81L0

## AVAILABLE FINISHINGS

| | | |
|---|---|---|
| | **21** | 21 Chrome |
| | **2F** | 2F Brushed Nickel |
| | **2W** | 2W Brushed Gold |
| | **2X** | 2X Black Titanium |
| | **3W** | 3W Brushed Black Titanium |
| | **40** | 40 Matt Black |
| | **48** | 48 Tobacco |
| | **5G** | 5G Rose Gold |

## CHARACTERISTICS

| | |
|---|---|
| Installation | **Concealed** |
| Required concealed parts | **ZA0G81L0** |

2026-11-23

© 2021 Cisal. Via Pietro Durio 160 - 28010 - Alzo (NO) - Italia
Mail: cisal@cisal.it, Telefono: (+39) 0322 918111, P.Iva IT02422810032.