Expo. part for concealed S.L. shower valve PLISSÉ ENCANTO_N20G8100

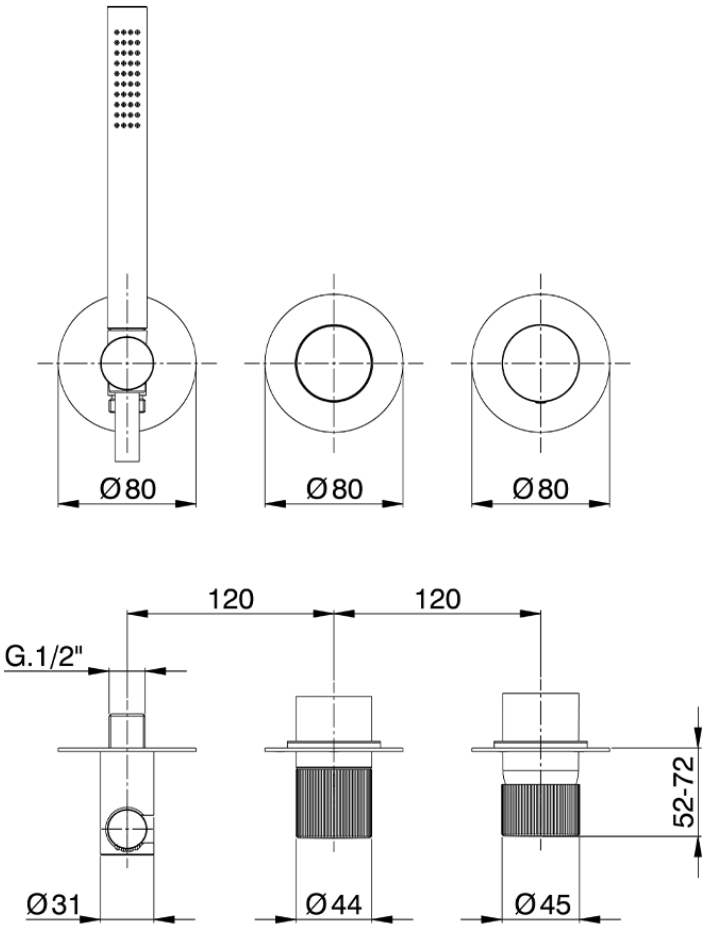

N20G8100 https://en.cisal.it/expo-part-for-concealed-s-l-shower-valve-plisse-encanto-n20g8100

2026-11-23

© 2021 Cisal. Via Pietro Durio 160 - 28010 - Alzo (NO) - Italia
Mail: cisal@cisal.it, Telefono: (+39) 0322 918111, P.Iva IT02422810032.