Cisal
TEL. (+39) 0322 918111
MAIL. cisal@cisal.it

Expo. part for single lever washbasin valve PLISSÉ ENCANTO_N2005516

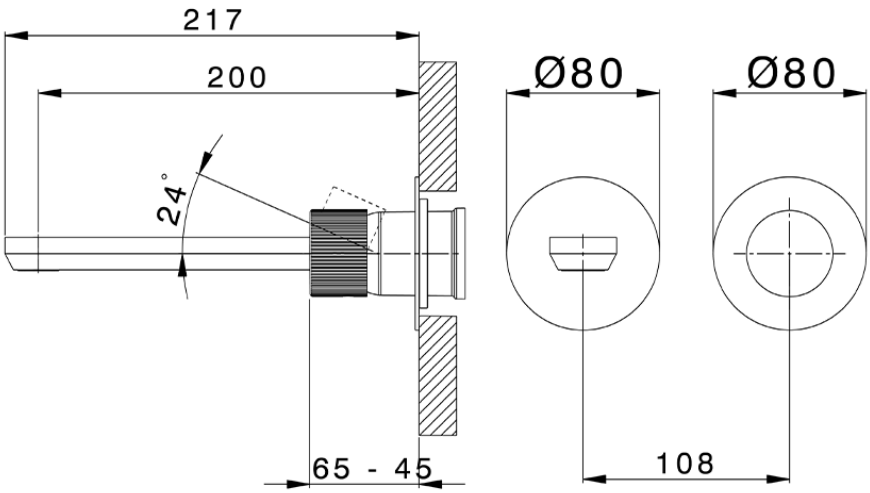

N2005516 https://en.cisal.it/expo-part-for-single-lever-washbasin-valve-plisse-encanto-n2005516

2026-11-24

© 2021 Cisal. Via Pietro Durio 160 - 28010 - Alzo (NO) - Italia
Mail: cisal@cisal.it, Telefono: (+39) 0322 918111, P.Iva IT02422810032.