Cisal
TEL. (+39) 0322 918111
MAIL. cisal@cisal.it

2-fonctions single lever shower panel SHOWER COLUMNS_ZS005030

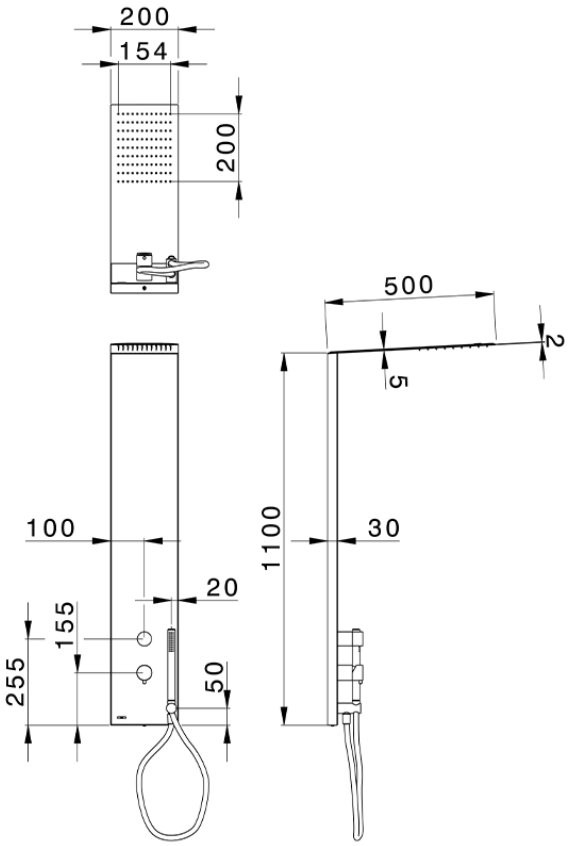

ZS005030 https://en.cisal.it/2-fonctions-single-lever-shower-panel-shower-columns-zs005030

2026-02-03

© 2021 Cisal. Via Pietro Durio 160 - 28010 - Alzo (NO) - Italia
Mail: cisal@cisal.it, Telefono: (+39) 0322 918111, P.Iva IT02422810032.