Cisal
TEL. (+39) 0322 918111
MAIL. cisal@cisal.it

Exposed part for con.thermo.shower valve PURA ENCANTO_N10G4100

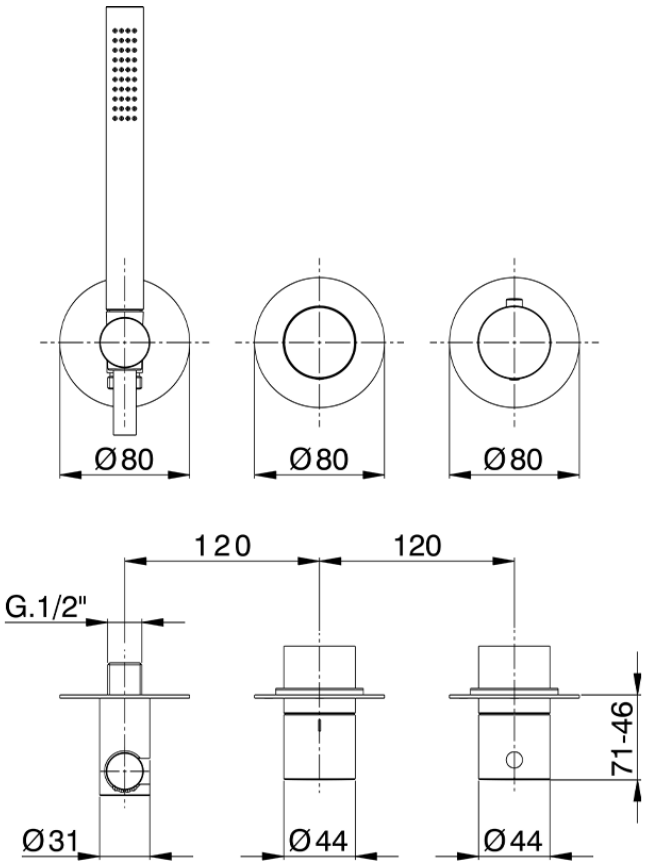

N10G4100 https://en.cisal.it/exposed-part-for-con-thermo-shower-valve-pura-encanto-n10g4100

2026-11-24

© 2021 Cisal. Via Pietro Durio 160 - 28010 - Alzo (NO) - Italia
Mail: cisal@cisal.it, Telefono: (+39) 0322 918111, P.Iva IT02422810032.