Cisal
TEL. (+39) 0322 918111
MAIL. cisal@cisal.it

Exposed part for con.thermo.shower valve PURA ENCANTO_N10G4100



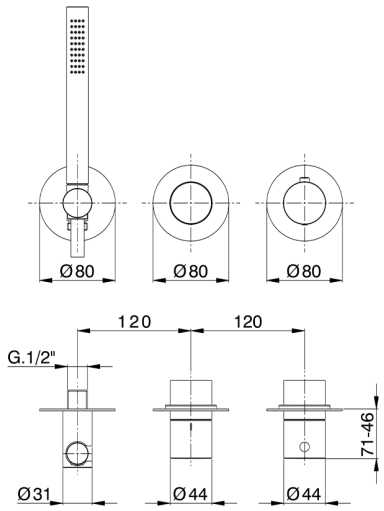

MODEL **N10G4100**

Exposed part for con.thermo.shower valve PURA,with 2-outlet deviastop,22,5 mm Brass One Spray handshower,150 cm SUPREME smooth flexible hose,without concealed part - for item ZA0G41L0

AVAILABLE FINISHINGS

	**21**	21 Chrome
	**2F**	2F Brushed Nickel
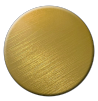	**2W**	2W Brushed Gold
	**2X**	2X Black Titanium
	**3W**	3W Brushed Black Titanium
	**40**	40 Matt Black
	**48**	48 Tobacco
	**5G**	5G Rose Gold



Thermostatic

The Cisal thermostatic is your personal water manager, helping you to handle, control and save water and energy.

CHARACTERISTICS

Installation	**Concealed**
Required concealed parts	**ZA0G41L0**

2026-11-23

© 2021 Cisal. Via Pietro Durio 160 - 28010 - Alzo (NO) - Italia
Mail: cisal@cisal.it, Telefono: (+39) 0322 918111, P.Iva IT02422810032.