Cisal
TEL. (+39) 0322 918111
MAIL. cisal@cisal.it

Bath mixer, full equipment BARCELONA_BA000090

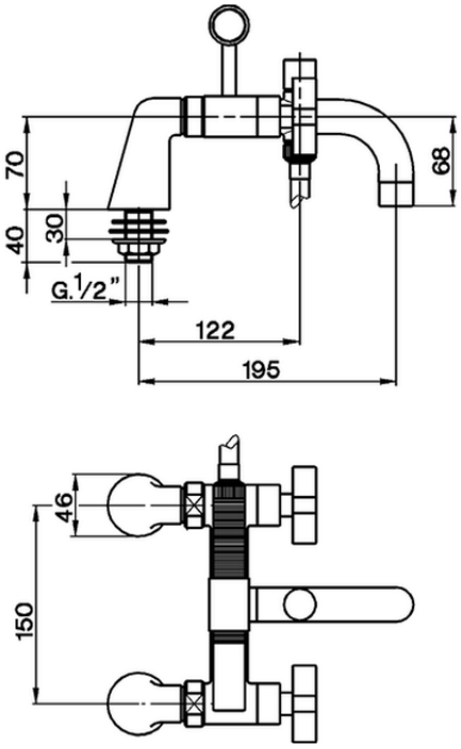

BA000090

https://en.cisal.it/bath-mixer-full-equipment-barcelona-ba000090

2026-03-16

© 2021 Cisal. Via Pietro Durio 160 - 28010 - Alzo (NO) - Italia
Mail: cisal@cisal.it, Telefono: (+39) 0322 918111, P.Iva IT02422810032.