Cisal
TEL. (+39) 0322 918111
MAIL. cisal@cisal.it

Double towel holder BATHROOM ACCESSORIES_SY090210

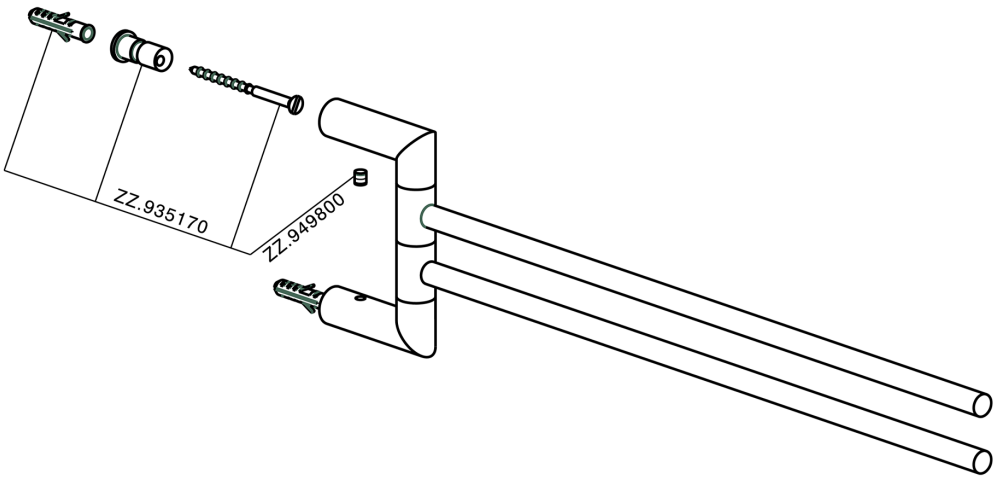

SY090210

https://en.cisal.it/double-towel-holder-bathroom-accessories-sy090210

2026-09-17

© 2021 Cisal. Via Pietro Durio 160 - 28010 - Alzo (NO) - Italia
Mail: cisal@cisal.it, Telefono: (+39) 0322 918111, P.Iva IT02422810032.