Cisal
TEL. (+39) 0322 918111
MAIL. cisal@cisal.it

Expo. part for single lever washbasin valve PURA ENCANTO_N1005517

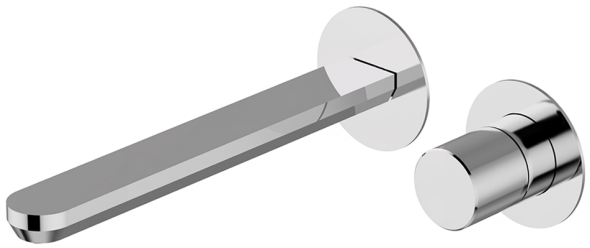

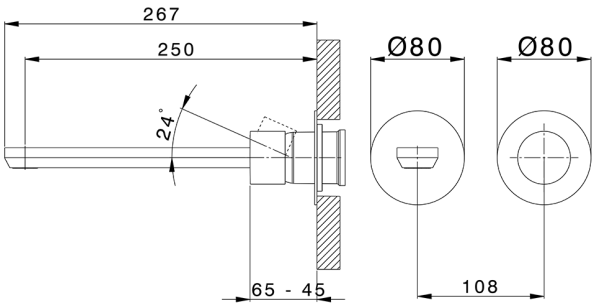

MODEL **N1005517**

Expo.part for single lever washbasin valve PURA,without concealed part,spout L.250 mm,for item Easy-Box ZA002450

AVAILABLE FINISHINGS

	21	21 Chrome
	2F	2F Brushed Nickel
	2W	2W Brushed Gold
	2X	2X Black Titanium
	3W	3W Brushed Black Titanium
	40	40 Matt Black
	48	48 Tobacco
	5G	5G Rose Gold

CHARACTERISTICS

Installation	**Concealed**
Required concealed parts	**ZA002450**

2026-11-24

© 2021 Cisal. Via Pietro Durio 160 - 28010 - Alzo (NO) - Italia
Mail: cisal@cisal.it, Telefono: (+39) 0322 918111, P.Iva IT02422810032.