Concealed 2-outlets diverter TR_TR000200

cisal

TR 00021 (TR 00020 - TR 00030)

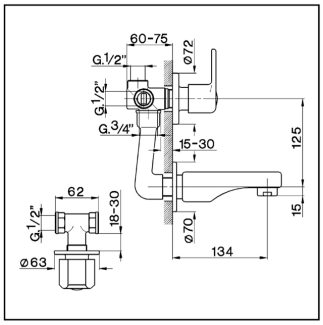

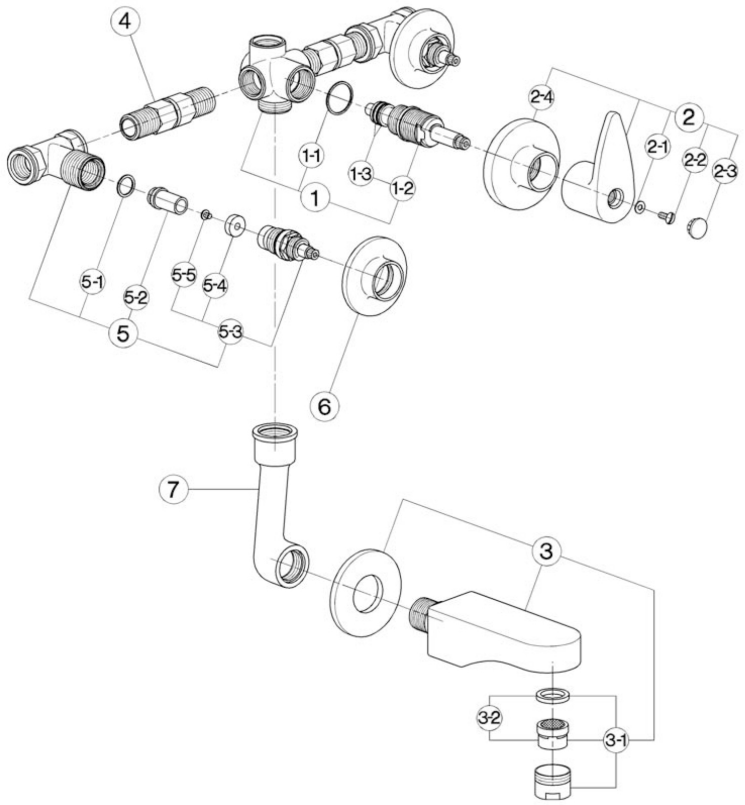

- **Gruppo vasca - doccia incasso**
- ***Concealed bath-shower mixer***
- **UP-Badebatterie**
- ***Mélangeur bain/douche à encastrer***

bar	PORTATA BOCCA DI EROGAZIONE * *SPOUT FLOW RATE* DURCHFLUSS WANNENEINLAUF *DÉBIT BEC DÉVERSEUR* l/min.
0.5	10
1	14
2	20
3	24.5
4	28
5	31.5

* con resistenza silenziosa della classe di portata C (30 l/min. a 3 bar)
with hydraulic resistance of flow rate class C (30 l/min. at 3 bar)
mit geräuscharmen Widerstand der Durchflussklasse C (30 l/min. bei 3 bar)
avec aérateur classe C (30 l/min. à 3 bar)

NR.	DESCRIZIONE *DESCRIPTION* BESCHREIBUNG *DÉSCRIPTION*	N. CODICE *CODE NO.* WERKSNR. *NR. CODE*
1	Gruppo deviazione incasso "TR" *Diverter concealed "TR"* Umstelloberteil "TR" *Inverseur B/D "TR"*	ZZ 92733 0
1-1	Guarnizione fibra 27x24x1 *Gasket rubber 27x24x1* Fiberdichtung 27x24x1 *Joint en fibre rouge 27x24x1*	ZZ 92687 0
1-2	Vitone per deviazione incasso *Diverting valve for concealed mixer* Umstelloberteil *Tête pour inverseur*	ZZ 92769 0
1-3	O.R. 11 NBR 75 SH. *O.R. 11 NBR 75 SH.* O.R. 11 NBR 75 SH. *O.R. 11 NBR 75 SH.*	ZZ 92690 0
2	Maniglia e cappuccio deviazione incasso "TR" *Handle with escutcheon for diverter "TR"* Griff + Kappe UP - Umst."TR" *Croisillon + rosace "TR"*	ZZ 90012 0
2-1	Rondella ottone 10x4,5x0,8 *Ring in brass 10x4,5x0,8* Unterlegscheibe 10x4,5x0,8 *Joint laiton 10x4,5x0,8*	ZZ 92663 0
2-2	Vite M.4,5x10 tb. tc. zigrinata *Screw M.4,5x10* Schraube M.4,5x10 *Vis M.4,5x10*	ZZ 92609 0
2-3	Placchetta a scatto deviatore vasca "TR" *Cap for diverter "TR"* Abdeckkappe "TR" *Plaquette cache - vis inverseur "TR"*	ZZ 92610 0
2-4	Cappuccio centrale per dev. gruppo incasso *Escutcheon for concealed diverter* Abdeckkappe *Rosace - inverseur à encastrer*	ZZ 92594 0
3	Bocca per incasso *Spout concealed* Auslauf-UP *Bec à encastrer*	ZA 00024 0
3-1	Aeratore M.28x1 IC *Mousseur M.28x1 IC* Perlator M.28x1 IC *Mousseur M.28x1 IC*	ZZ 92837 0
3-2	Cartuccia per aeratore M. 28x1 *Mousseur cartridge M.28x1* Kart. f/Perlator M.28x1 *Cartouche x mousseur M.28x1*	ZZ 92694 0
4	Raccordo universale per gruppo incasso *Connection for concealed mixer* Stand-Anschluss *Raccord universel*	ZZ 92600 0
5	Rubinetto incasso 1/2" *Concealed stop cock 1/2"* Unterputventil 1/2" *Robinet à encastrer 1/2"*	ZZ 92732 0
5-1	Guarnizione alluminio cotto 18x14,2x1 *Gasket aluminium 18x14,2x1* Dichtung 18x14,2x1 *Joint alluminium 18x14,2x1*	ZZ 92667 0
5-2	Sede per rubinetto incasso *Seat for concealed stop cock* Sitz f/UP - Ventil *Siège robinet encastrer*	ZZ 92611 0
5-3	Vitone 1/2" "TR" *Headvalve 1/2" "TR"* Oberteil 1/2" "TR" *Tête 1/2" "TR"*	ZZ 92869 0
5-4	Guarnizione NBR 90 SH. 16,9x5,5x5 *Gasket NBR 90 SH. 16,9x5,5x5* Dichtung NBR 90 SH. 16,9x5,5x5 *Joint NBR 90 SH. 16,9x5,5x5*	ZZ 92699 0
5-5	Vite M.4x4,5 tb. Ø8 t.cr. *Screw M.4x4,5* Schraube M.4x4,5 *Vis M.4x4,5*	ZZ 92625 0
6	Cappuccio per rubinetto incasso "TR" *Escutcheon for concealed stop cock "TR"* Abdeckkappe "TR" *Rosace - robinet "TR"*	ZZ 92593 0
7	Raccordo collegamento a pipa per incasso *Connection for concealed mixer* UP - Verbindungsset *Raccord x mél. B/D à encastrer*	ZZ 92592 0

© 2021 Cisal. Via Pietro Durio 160 - 28010 - Alzo (NO) - Italia
Mail: cisal@cisal.it, Telefono: (+39) 0322 918111, P.Iva IT02422810032.