Cisal
TEL. (+39) 0322 918111
MAIL. cisal@cisal.it

Single lever bidet mixer ROCK&ROLL_RK000564

MODEL **RK000564**

Single lever bidet mixer,without pop up waste,G.3/8"
Stainless Steel Flexible

AVAILABLE FINISHINGS

21 21 Chrome

2F 2F Brushed Nickel

40 40 Matt Black

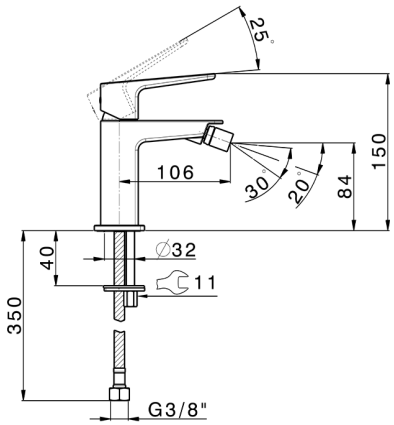

CHARACTERISTICS

Cartridge Spare Parts **ZZ96550000**

25 mm Cartridge

© 2021 Cisal. Via Pietro Durio 160 - 28010 - Alzo (NO) - Italia
Mail: cisal@cisal.it, Telefono: (+39) 0322 918111, P.Iva IT02422810032.

Cisal
TEL. (+39) 0322 918111
MAIL. cisal@cisal.it

Single lever bidet mixer ROCK&ROLL_RK000564

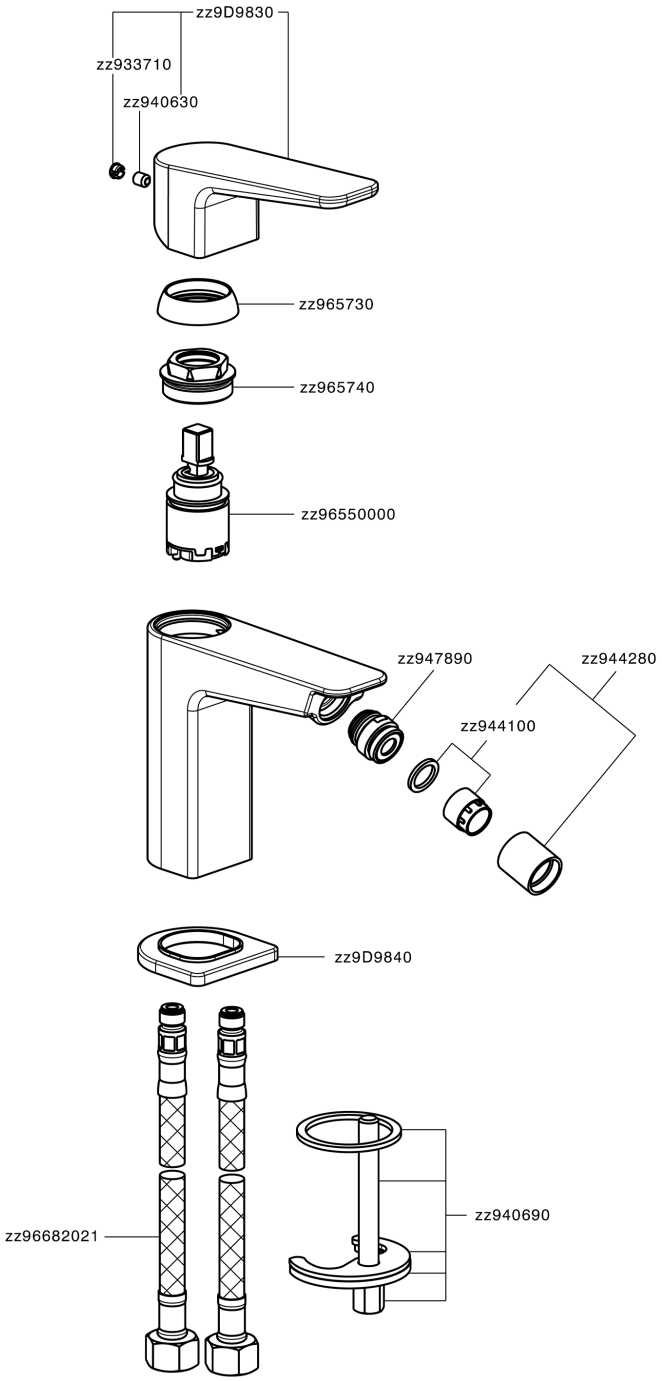

RK000564

https://en.cisal.it/single-lever-bidet-mixer-rockroll-rk000564

2026-02-23

© 2021 Cisal. Via Pietro Durio 160 - 28010 - Alzo (NO) - Italia
Mail: cisal@cisal.it, Telefono: (+39) 0322 918111, P.Iva IT02422810032.