Cisal
TEL. (+39) 0322 918111
MAIL. cisal@cisal.it

Single lever sink mixer KITCHEN_AY002530

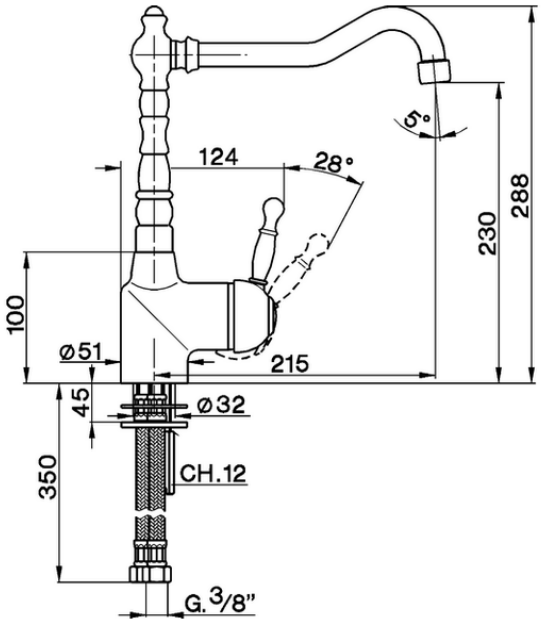

AY002530

https://en.cisal.it/single-lever-sink-mixer-kitchen-ay002530

2026-04-29

© 2021 Cisal. Via Pietro Durio 160 - 28010 - Alzo (NO) - Italia
Mail: cisal@cisal.it, Telefono: (+39) 0322 918111, P.Iva IT02422810032.