Shower set ARCANA COMPONENTS_AR003112

cisal

AR 00311

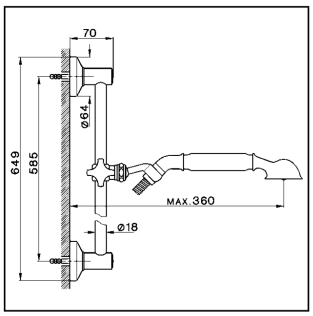

- **Set Arcana**
- ***Sliding bar***
- **Wandstange mit Handbrause Arcana**
- ***Combiné de douche Arcana***

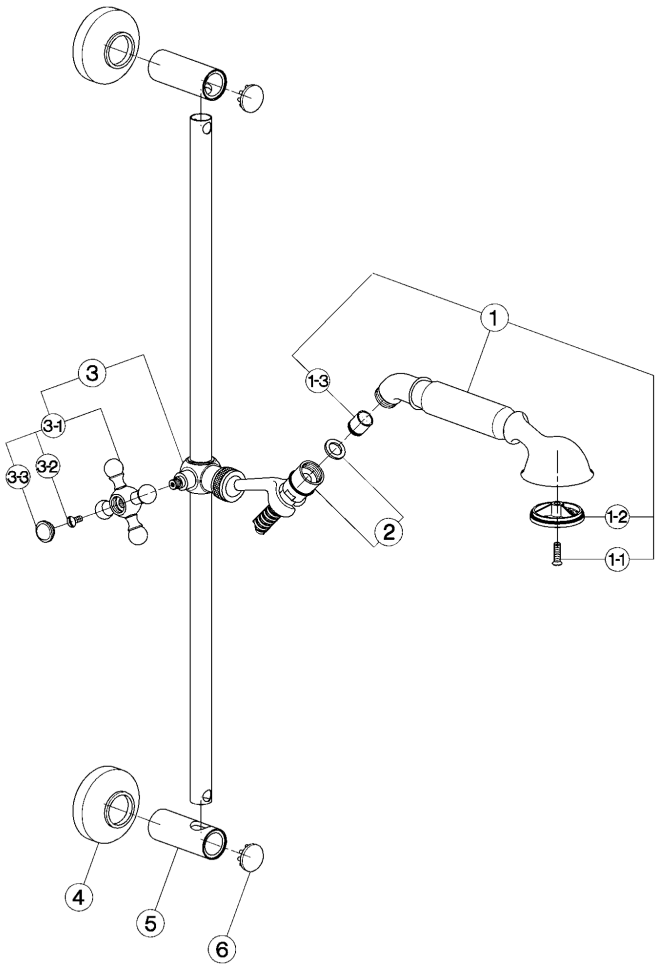

bar	PORTATA * *FLOW RATE* DURCHFLUSS *DÉBIT* l/min.
0.5	7.5
1	11.5
2	18.5
3	24
4	29
5	33

* senza resistenza silenziosa (uscita libera)
without hydraulic resistance
ohne Widerstand
sans résistance hydraulique

NR.	DESCRIZIONE *DESCRIPTION* BESCHREIBUNG *DÉSCRIPTION*	N. CODICE *CODE NO.* WERKSNR. *NR. CODE*
1	Doccia per gruppo vasca "AR" *Handshower "AR"* Handbrause-WB-"AR" *Douchette "AR"*	ZZ 90078 0
1-1	Vite di fissaggio diffusore per doccia in ottone *Fixing screw for spray-kit handshower* Befestigungsschraube f.Einsatz f.Br. in Messing *Vis fixation diffuseur pour douchette en laiton*	ZZ 92640 0
1-1	Vite di fissaggio diffusore per doccia in ABS *Fixing screw for spray-kit ABS handshower* Befestigungsschraube f. Einsatz f.Brause in ABS *Vis de fixation diffuseur pour douchette en ABS*	ZZ 93401 0
1-2	Diffusore doccia "AR" *Spray-kit handshower "AR"* Einsatz f/Brause "AR" *Diffuseur douchette "AR"*	ZZ 90544 0
1-3	Valvola anti-ritorno Ø15 per doccia *Back-flow valve Ø15* Durchflussverhinderer Ø15 *Clapet anti-retour Ø15*	ZZ 92956 0
2	Flessibile 150 cm Ø14 1/2"x1/2" DA conico *Flex 150 cm Ø14 1/2"x1/2" conic* Brauseschlauch 150 cm Ø14 1/2"x1/2" *Flex 150 cm Ø14 1/2"x1/2"*	ZA 00901 0

NR.	DESCRIZIONE *DESCRIPTION* BESCHREIBUNG *DÉSCRIPTION*	N. CODICE *CODE NO.* WERKSNR. *NR. CODE*
2	Flessibile 150 cm Ø14 1/2"x3/4" DA conico *Flex 150 cm Ø14 1/2"X3/4" conic* Brauseschlauch 150 cm Ø14 1/2"x3/4" *Flex 150 cm Ø14 1/2"x3/4"*	ZZ 92767 0
3	Scorsoio saliscendi "AR" *Sliding hook "AR"* Brausehalterung "AR" *Support glissant "AR"*	ZZ 92939 0
3-1	Maniglia "AR" con vite e placchetta *Handle with screw and plate "AR"* Griff "AR" mit Schraube und Abdeckkappe *Croisillon avec vis et plaquette "AR"*	ZZ 90307 0
3-2	Vite M.4,5x10 tb. tc. zigrinata *Screw M.4,5x10* Schraube M.4,5x10 *Vis M.4,5x10*	ZZ 92609 0
3-3	Placchetta a vite maniglia "AR" *Cap for handle "AR"* Abdeckkappe "AR" Griff *Plaquette cache - vis crois. "AR"*	ZZ 92617 0
4	Rosone saliscendi "AR" *Escutcheon for sliding bar "AR"* Rosette f/Brausestange "AR" *Rosace barre de douche "AR"*	ZZ 92591 0

NR.	DESCRIZIONE *DESCRIPTION* BESCHREIBUNG *DÉSCRIPTION*	N. CODICE *CODE NO.* WERKSNR. *NR. CODE*
5	Supporto a muro saliscendi "AR" *Bracket for sliding shower set "AR"* Halterung pass. zu Wandstange "AR" *Support barre de douche "AR"*	ZZ 92920 0
6	Placchetta per supporto saliscendi "AR" *Cap for sliding bar-holder "AR"* Abdeckkappe f/Brausestange "AR" *Plaquette support barre de douche "AR"*	ZZ 92954 0

AR.24

© 2021 Cisal. Via Pietro Durio 160 - 28010 - Alzo (NO) - Italia
Mail: cisal@cisal.it, Telefono: (+39) 0322 918111, P.Iva IT02422810032.