Single lever 'high' washbasin mixer SLIM_SM001710

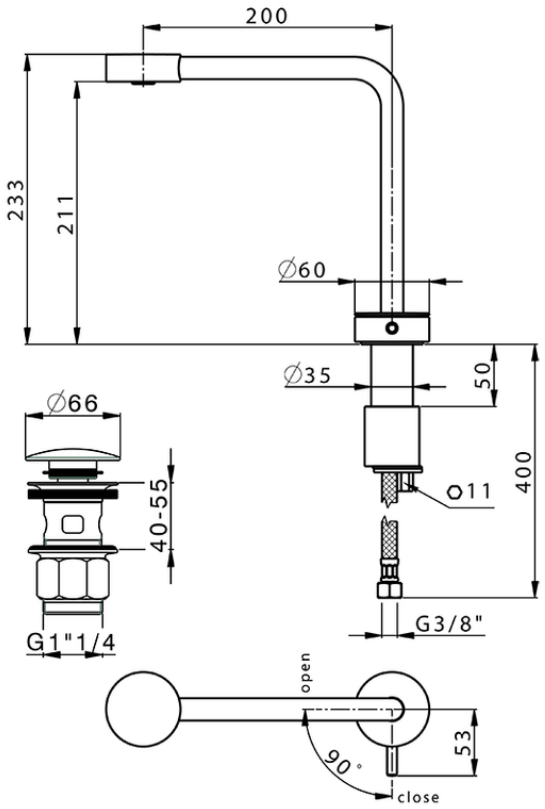

SM001710

https://en.cisal.it/single-lever-high-washbasin-mixer-slim-sm001710

2026-11-25

© 2021 Cisal. Via Pietro Durio 160 - 28010 - Alzo (NO) - Italia
Mail: cisal@cisal.it, Telefono: (+39) 0322 918111, P.Iva IT02422810032.