Cisal
TEL. (+39) 0322 918111
MAIL. cisal@cisal.it

Free Standing Progressive Shower Column XION_XI005120

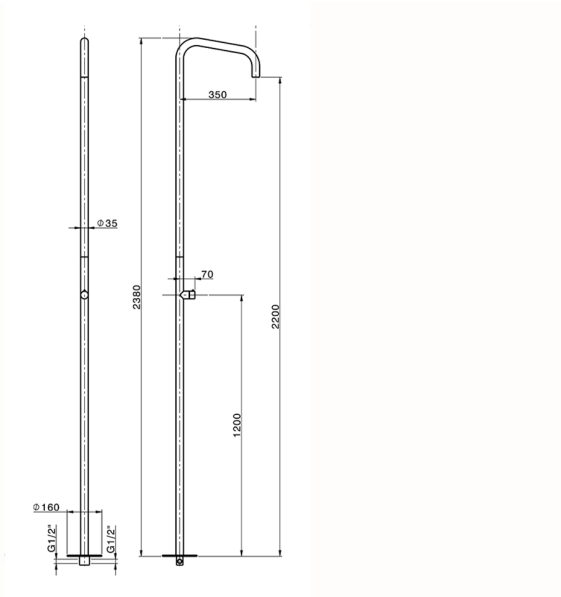

MODEL **XI005120**

Free Standing Progressive Shower Column,for Indoor/Outdoor use,with rain spray aerator,INOX AISI 316L

AVAILABLE FINISHINGS

D1 D1 Brushed Inox

CHARACTERISTICS

Cartridge Spare Parts **ZZ9E521000**

25 mm Progressive single-lever cartridge

2026-03-15

© 2021 Cisal. Via Pietro Durio 160 - 28010 - Alzo (NO) - Italia
Mail: cisal@cisal.it, Telefono: (+39) 0322 918111, P.Iva IT02422810032.