Bath drain with overflow COMPONENTS_ZA005710

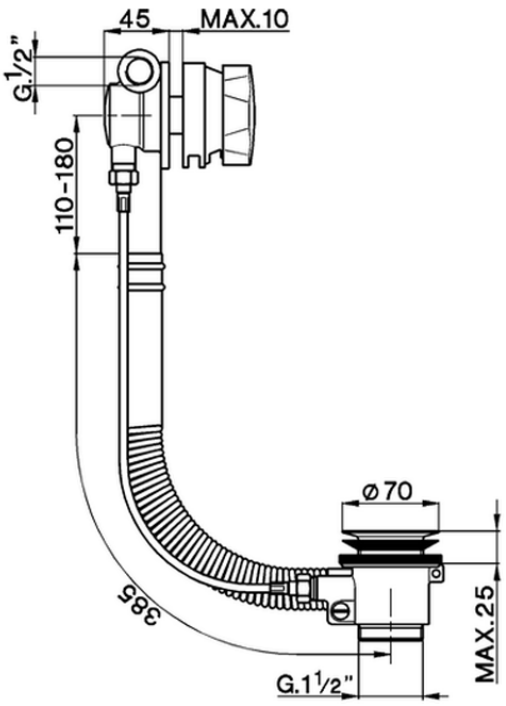

ZA005710

https://en.cisal.it/bath-drain-with-overflow-components-za005710

2026-11-23

© 2021 Cisal. Via Pietro Durio 160 - 28010 - Alzo (NO) - Italia
Mail: cisal@cisal.it, Telefono: (+39) 0322 918111, P.Iva IT02422810032.