Cisal
TEL. (+39) 0322 918111
MAIL. cisal@cisal.it

Single lever 2-functions shower column SHOWER COLUMNS_ST005050

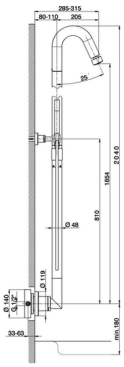

MODEL **ST005050**

Single lever 2-functions shower column,automatic diverter,wall mounted fixed column,not sliding shower bracket,Brass minimalistic one spray handshower,48 mm Brass Round Head Shower,150 cm PVC Flexible Hose

AVAILABLE FINISHINGS

21 21 Chrome

2A 2A Satin Brushed Nickel

CHARACTERISTICS

Single Lever	**1**
Cartridge Spare Parts	**ZZ93792000**

38 mm Cartridge

© 2021 Cisal. Via Pietro Durio 160 - 28010 - Alzo (NO) - Italia
Mail: cisal@cisal.it, Telefono: (+39) 0322 918111, P.Iva IT02422810032.

Cisal
TEL. (+39) 0322 918111
MAIL. cisal@cisal.it

Single lever 2-functions shower column SHOWER COLUMNS_ST005050

cisal

ST 00505 - ST 000510

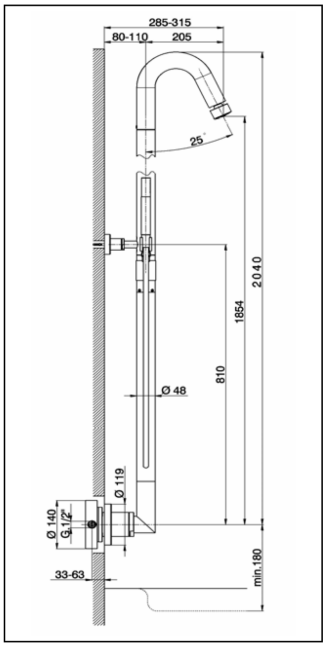

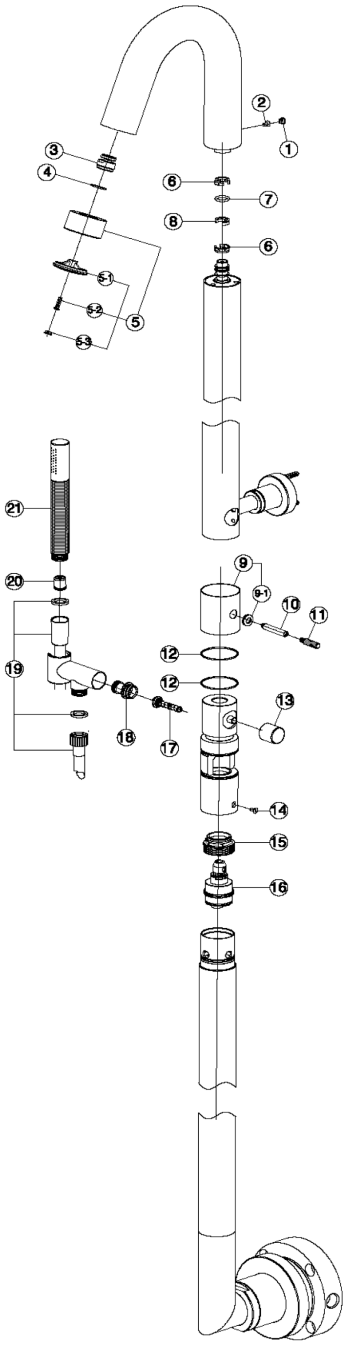

ST005050 https://en.cisal.it/single-lever-2-functions-shower-column-shower-columns-st005050

© 2021 Cisal. Via Pietro Durio 160 - 28010 - Alzo (NO) - Italia
Mail: cisal@cisal.it, Telefono: (+39) 0322 918111, P.Iva IT02422810032.

Single lever 2-functions shower column SHOWER COLUMNS_ST005050

cisal

ST 00505 - ST 000510

NR.	DESCRIZIONE DESCRIPTION BESCREIBUNG DESCRIPTION	N.CODICE CODE NO. WERSKNR. NR.CODE
1	Placchetta per leva neutra Cap for lever Abdeckkappe f/Hebel Plaquette levier	ZZ927110
2	Vite M.6 Screw M.6 Schraube M.6 Vis M.6	ZZ941090
3	Snodo 20/22 Joint 20/22 Gelenkstueck 20/22 Rotule 20/22	ZZ941120
4	Guarnizione 20,8x16x1,5 Gasket 20,8x16x1,5 Dichtung 20,8x16x1,5 Joint 20,8x16x1,5	ZZ941130
5	Corpo soffione doccia Showerhead's body Koerper der Kopfbrause Corps pomme de douche	ZZ941100
5-1	Disco soffione doccia Showerhead's disc Disk der Kopfbrause Disque pour pomme de douche	ZZ941140
5-2	Vite W.3/16x16 tb. Screw W.3/16x16 tb. Schraube W.3/16x16 tb. Vis W.3/16x16 tb.	ZZ941150
5-3	Placchetta Cap Abdeckkappe Plaquette	ZZ941160
6	Anello per canna Ring for spout Ring fuer Auslauf Bague pour bec	ZZ941020

NR.	DESCRIZIONE DESCRIPTION BESCREIBUNG DESCRIPTION	N.CODICE CODE NO. WERSKNR. NR.CODE
7	O.R. 11 NBR 75 SH. O.R. 11 NBR 75 SH. O.R. 11 NBR 75 SH. O.R. 11 NBR 75 SH.	ZZ926900
8	Rondella antifrizione Dichtung fuer Huelse Washer for covering tube Joint pour bague couverture	ZZ941030
9	Canotto copricartuccia Tube for escutcheon Huelse f.Abdeckkappe Canot couvre-cartouche	ZZ937890
9-1	Guarnizione per canotto copricartuccia Gasket for tube for escutcheon Dichtung Huelse f.Abdeckkappe Joint pour canot couvre-cartouche	ZZ937900
10	Asta leva monocomando Rod for Lever Stange fuer Hebel Tige levier mitigeur	ZZ937910
11	Terminale leva "LS" Knob for lever "LS" Design Griffelement "LS" Embout levier "LS"	LS010000
12	Rondella antifrizione Dichtung fuer Huelse Washer for covering tube Joint pour bague couverture	ZZ937940
13	Pomolo per deviazione Knob for diverter Zugknopf Umsteller Pommeau pour inverseur	ZZ933290
14	Vite M.4x8 Screw M.4x8 Schraube M.4x8 Vis M.4x8	ZZ938030

NR.	DESCRIZIONE DESCRIPTION BESCREIBUNG DESCRIPTION	N.CODICE CODE NO. WERSKNR. NR.CODE
15	Calotta bloccaggio cartuccia Nut for mixing valve Mutter f/Kartusche Ecrou pour cartouche	ZZ937930
16	Cartuccia monocomando Mixing valve Kartusche Cartouche mitigeurs	ZZ937920
17	Asta deviazione completa Complete diverting rod Umstellung Tige inverseur complète	ZZ933140
18	Perno di fissaggio Pin Zapfen Vis	ZZ942390
19	Flex PVC 150 cm Ø14 1/2"x1/2" conico Flex PVC 150 cm Ø14 1/2"x1/2" Brauseschl. PVC 150 cm Ø14 1/2"x1/2" Flex.PVC 150 cm Ø14 1/2"x1/2"	ZA009030
20	Valvola anti-ritorno Ø15 per doccia Back-flow valve Ø15 Durchflussverhinderer Ø15 Clapet anti-retour Ø15	ZZ929560
21	Doccia minimale Minimal handshower Handbrause minimal Douchette minimal	DS014090

ST005050 https://en.cisal.it/single-lever-2-functions-shower-column-shower-columns-st005050

2026-01-11

© 2021 Cisal. Via Pietro Durio 160 - 28010 - Alzo (NO) - Italia
Mail: cisal@cisal.it, Telefono: (+39) 0322 918111, P.Iva IT02422810032.