Cisal
TEL. (+39) 0322 918111
MAIL. cisal@cisal.it

Elbow SHOWER_CE017000



MODEL **CE017000**

Elbow

AVAILABLE FINISHINGS

- **21** 21 Chrome
- **24** 24 Gold
- **2B** 2B Polished Nickel
- **2P** 2P Rose Gold

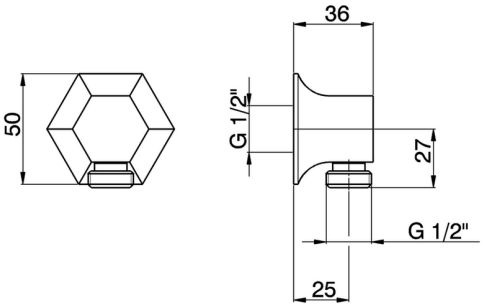

CHARACTERISTICS

2026-11-25

© 2021 Cisal. Via Pietro Durio 160 - 28010 - Alzo (NO) - Italia
Mail: cisal@cisal.it, Telefono: (+39) 0322 918111, P.Iva IT02422810032.