Cisal
TEL. (+39) 0322 918111
MAIL. cisal@cisal.it

Elbow SHOWER_CE017000

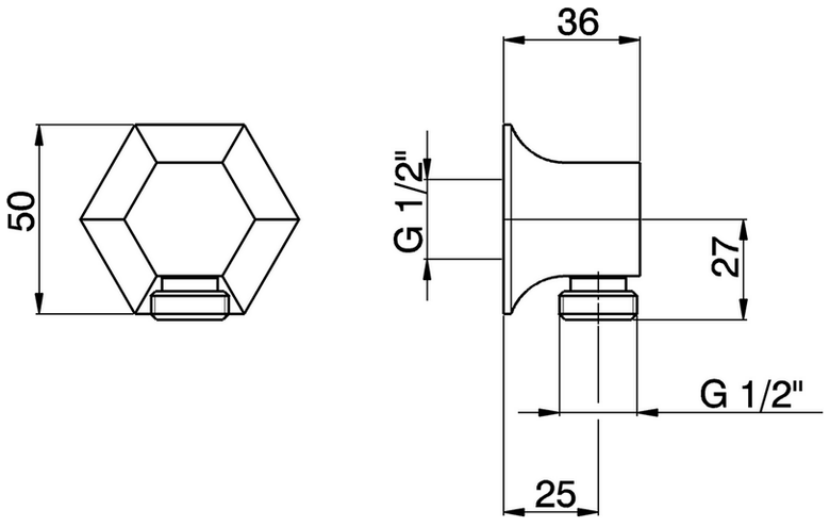

CE017000

https://en.cisal.it/elbow-shower-ce017000

2026-11-25

© 2021 Cisal. Via Pietro Durio 160 - 28010 - Alzo (NO) - Italia
Mail: cisal@cisal.it, Telefono: (+39) 0322 918111, P.Iva IT02422810032.