Cisal
TEL. (+39) 0322 918111
MAIL. cisal@cisal.it

Bidet handshower set HYGENIC SHOWERS_SC007910

MODEL **SC007910**

Bidet handshower set,wall mounted holder with safety valve,Bidet handshower,PVC 120 cm.Flexible hose

AVAILABLE FINISHINGS

21 21 Chrome

24 24 Gold

CHARACTERISTICS

Bidet handshower

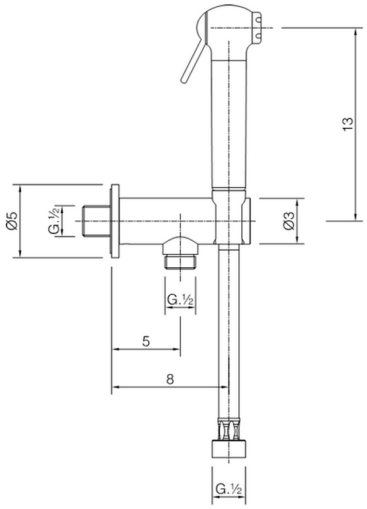

Hygienic Spray

Multi-jets hygienic hand shower, for personal hygiene care.

2025-12-17

© 2021 Cisal. Via Pietro Durio 160 - 28010 - Alzo (NO) - Italia
Mail: cisal@cisal.it, Telefono: (+39) 0322 918111, P.Iva IT02422810032.