Cisal
TEL. (+39) 0322 918111
MAIL. cisal@cisal.it

2-function single lever shower set SHOWER COLUMNS_QT1R4031

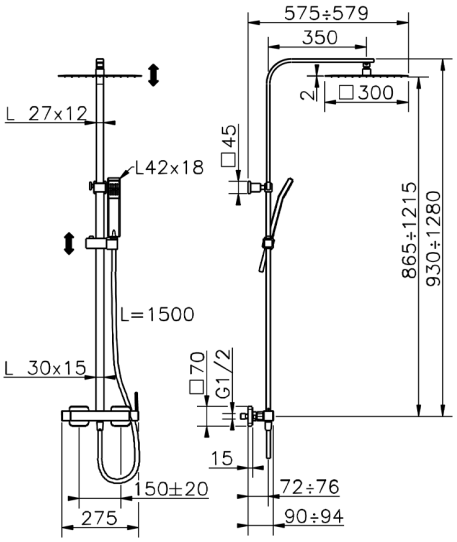

MODEL **QT1R4031**

2-function single lever shower set,2 outlet deviastop,adjustable riser column,sliding shower bracket,42x18 mm ABS Quad one spray handshower,300x300 mm INOX square showerhead 2 mm thick,150 cm smooth SILVERFLEX Flexible Hose

AVAILABLE FINISHINGS

21 21 Chrome

CHARACTERISTICS

Single Lever	**1**
Cartridge Spare Parts	**ZZ94240000**

25 mm Cartridge

2026-04-05

© 2021 Cisal. Via Pietro Durio 160 - 28010 - Alzo (NO) - Italia
Mail: cisal@cisal.it, Telefono: (+39) 0322 918111, P.Iva IT02422810032.