Cisal
TEL. (+39) 0322 918111
MAIL. cisal@cisal.it

Handshower bracket ARCANA COMPONENTS_AR003620

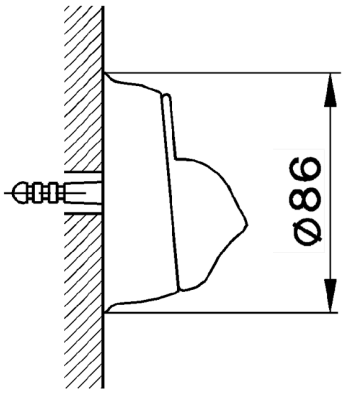

MODEL **AR003620**

Handshower bracket

AVAILABLE FINISHINGS

- **21** 21 Chrome
- **24** 24 Gold
- **26** 26 Old Copper
- **27** 27 Old Bronze
- **2A** 2A Satin Brushed Nickel

CHARACTERISTICS

2026-09-15

© 2021 Cisal. Via Pietro Durio 160 - 28010 - Alzo (NO) - Italia
Mail: cisal@cisal.it, Telefono: (+39) 0322 918111, P.Iva IT02422810032.