Cisal
TEL. (+39) 0322 918111
MAIL. cisal@cisal.it

# Thermostatic deck-mounted 3-hole mixer GRACE_GLT79010

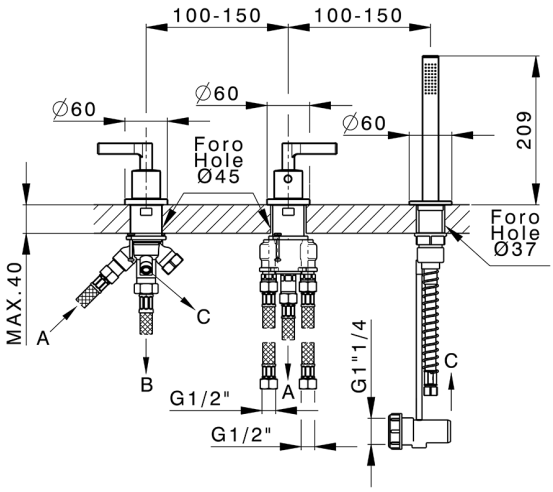


MODEL **GLT79010**

Thermostatic deck-mounted 3-hole mixer,2 outlet deviastop cartridge,22,5 mm Brass One Spray handshower,150 cm pull-out flexible hose

## AVAILABLE FINISHINGS

- **21** 21 Chrome
- **2F** 2F Brushed Nickel
- **2W** 2W Brushed Gold
- **5H** 5H Dark Brass Brushed
- **5L** 5L Brushed Black Titanium
- **6T** 6T Chrome/Matt Black

## CHARACTERISTICS

Cartridge Spare Parts **24.04A.PP**

**8x20 Plus P Thermostatic Valve**

© 2021 Cisal. Via Pietro Durio 160 - 28010 - Alzo (NO) - Italia
Mail: cisal@cisal.it, Telefono: (+39) 0322 918111, P.Iva IT02422810032.

Cisal
TEL. (+39) 0322 918111
MAIL. cisal@cisal.it

# Thermostatic deck-mounted 3-hole mixer GRACE_GLT79010

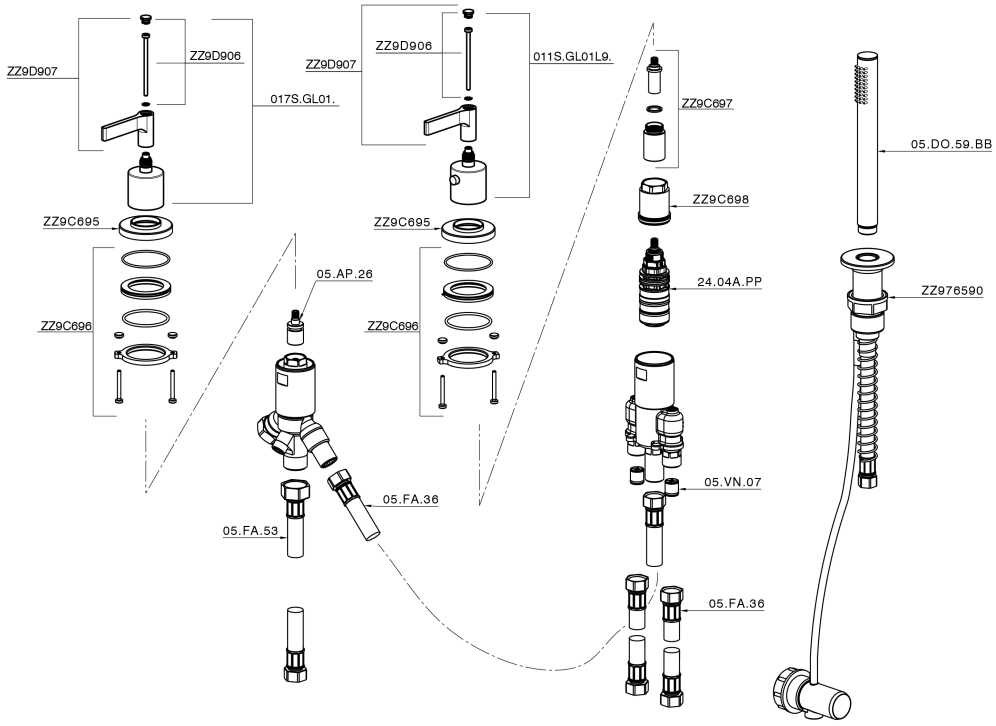


GLT79010 https://en.cisal.it/thermostatic-deck-mounted-3-hole-mixer-grace-glt79010

2026-02-24

© 2021 Cisal. Via Pietro Durio 160 - 28010 - Alzo (NO) - Italia
Mail: cisal@cisal.it, Telefono: (+39) 0322 918111, P.Iva IT02422810032.