Cisal
TEL. (+39) 0322 918111
MAIL. cisal@cisal.it

3-fonctions single lever shower panel SHOWER COLUMNS_ZS005050

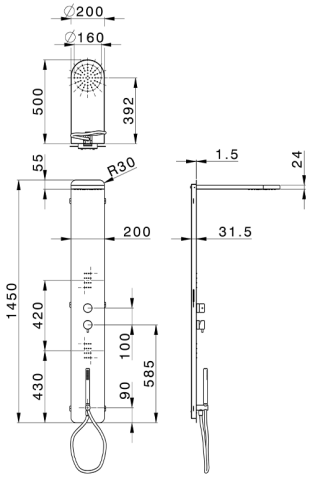

MODEL **ZS005050**

3-fonctions single lever shower panel,stainless steel AISI 304 shower panel,3 outlet deviastop cartridge,handshower holder with wall elbow,23 mm Brass One Spray handshower,2 front body jets,L.500 Ø100 thick 24mm rectang.round showerhead,rain function,150 cm PVC Flexible Hose

AVAILABLE FINISHINGS

D1 D1 Brushed Inox

40 40 Matt Black

4Q 4Q Matt White

D2 D2 Polished Inox

CHARACTERISTICS

Single Lever	**1**
Cartridge Spare Parts	**ZZ99751000**

35 mm Cartridge

2026-03-16

© 2021 Cisal. Via Pietro Durio 160 - 28010 - Alzo (NO) - Italia
Mail: cisal@cisal.it, Telefono: (+39) 0322 918111, P.Iva IT02422810032.